BHT FORGE

"WE EXPERT OF OILFIELD EQUIPMENT"

www.bhtforge.com

Founded in **2016** by **Loveshik Patel**, **BHT Forge** is a globally recognized manufacturer of high-quality **oil and gas equipment**. Operating under the brand name **BHT**, we specialize in precision-engineered forged components made from **Carbon Steel, Alloy Steel, Stainless Steel (SS), Brass, and Copper**. With a strong commitment to quality, innovation, and customer satisfaction, BHT Forge has become a trusted name in the oil and gas industry.

Our manufacturing facility, strategically located in **Rajkot - Jamnagar**, is equipped with **state-of-the-art forging and machining technology**. We adhere to the highest international standards and are a **TÜV SÜD and CE-certified company**, ensuring our products meet global quality and safety requirements.

With an expanding global footprint, BHT Forge exports its premium products to major international markets, including **the US, Canada, Colombia, UAE, Kuwait, Oman, Singapore, Malaysia, Germany, Iran, Iraq, Türkiye, Australia, Azerbaijan, and more.**

TUV
ISO 9001

CE
MARKEING

Choke Valves | Plug Valves | Flow Line | Wellhead Production
Hammer Union | Forge Fitting | Flanges

One Earth ♥ One Family ♥ One Future

BHT FORGE

Vision

"To be a global leader in forging technology, delivering high-performance and sustainable oil and gas equipment through precision engineering and innovation."

Mission

Uncompromised Quality: Adhere to the highest international standards through continuous improvement and strict quality control.
Technological Advancement: Invest in cutting-edge manufacturing processes to enhance product durability and efficiency.
Customer-Centric Approach: Build long-term relationships by providing reliable and customized solutions.
Global Expansion: Strengthen our presence in existing and emerging markets by delivering superior forged products.
Sustainability & Ethics: Operate responsibly by integrating eco-friendly and ethical business practices.

BHT FORGE

Milestones

2016
Established **BHT Forge** in Rajkot - Jamnagar, focusing on the production of high-quality oil and gas equipment.

2017
Successfully developed and launched our first range of **forged components** for the oil and gas sector.

2018
Expanded production to include **Carbon Steel, Alloy Steel, SS, Brass, and Copper materials**.

2020
Achieved **TÜV SÜD and CE Certifications**, ensuring compliance with international quality standards.

2022
Expanded into new international markets, including **Singapore, Malaysia, Australia, and Azerbaijan**.

2024
Introduced next-generation forged equipment with enhanced performance for high-pressure applications.

BHT FORGE

PRODUCT INDEX

Hammer Unions

BHT hammer unions are available in a wide range of sizes and in working pressures to 15,000 psi. Pressure seal, non-pressure seal, and welded styles are offered in various sizes. All BHT hammer unions provide pressure-tight, positive sealing and are available for standard services and sour gas models. BHT hammer unions for sour gas services are specially heat-treated for controlled hardness and utilises fluorocarbon elastomer seal rings.

Specifications For Threaded and Butt Weld Hammer Unions

Fig. No.	Assembly Color Code for Standard Service	Pressure Rating (PSI)				Nominal Pipe Sizes												
		Standard Service		Sour Gas Service		(in.)	1/2	1	1-1/4	1-1/2	2	2-1/2	3	4	5	6	8	10	12
		Cold Working	Test	Cold Working	Test	(mm)	13	25	32	38	50	65	80	100	125	150	200	250	300
50		500	750	N/A	N/A														
100		1,000	1,500	N/A	N/A														
101		1,000	1,500	N/A	N/A														
200		2,000	3,000	2,000	3,000														
201		2,000	3,000	2,000	3,000														
206		2,000	3,000	2,000	3,000														
207		2,000	3,000	2,000	3.000														
211		2,000	3,000	N/A	N/A														
300		2,000	3,000	N/A	N/A		*												
400		4,000	6,000	4,000	6,000										*	*			*
602		6,000	9,000	6,000	9,000														
1002		10,000	15,000	7,500	11,250										*	*			
1003		10,000	15,000	7,500	11,250									*	*				
1004		10,000	15,000	7,500	11,250														
1502		15,000	22,500	10,000	15,000														
2002		20,000	30,000	N/A	N/A														
2202		N/A	N/A	15,000	22,500														
6666		6,000	9,000	N/A	N/A														

* Indicates different Cold Working Pressure due to other design factor - Difference as shown below:

5”, 6”, 12”: Figure 400, Cold Working Pressure 2,500 PSI & Test Pressure 4,000 PSI
5”, 6” : Figure 1002 Butt weld, Cold Working Pressure 7,500 PSI & Test Pressure 11,250 PSI Std. Service
4”, 5” : Figure 1003 Butt weld, Cold Working Pressure 7,500 PSI & Test Pressure 11,250 PSI Std. Service
5”, 6” : Figure 1002 Butt weld, Cold Working Pressure 5,000 PSI & Test Pressure 7,500 PSI Sour Service
4”, 5” : Figure 1003 Butt weld, Cold Working Pressure 5,000 PSI & Test Pressure 7,500 PSI Sour Service
1/2” : Figure 300, Cold Working Pressure 15,000 PSI & Test Pressure 20,000 PSI, Zinc Plated

Hammer Unions

Fig. 100
Black Nut Yellow Subs
An economical union with precision machined metal-to-metal sealing surfaces for air, water, oil or gas service to 1,000 psi NSCWP*.

Fig. 207
Blue Cap Gray Subs
Interchangable Fig. 206 sub with blanking cap and O-ring seal to assure no-leak closure of manifolds and lines to 2,000 psi NSCWP*.

Fig. 602
Black Nut Orange Subs
A replaceable lip-type seal ring minimizes fluid flow turbulence and gives pressure seal for air. Water, oil, gas and mud service to 6,000 psi NSCWP*.

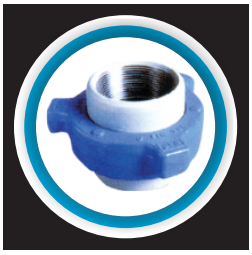

Fig. 206
Blue Nut Gray Subs
A precision metal-to-metal seal plus O-ring seal for air, water, oil, gas and mud service to 2,000 psi NSCWP*.

Fig. 1502
Blue Nut Red Subs
For manifold and truck mountings or installations encountering high pressures including air, water, oil, gas and mud services to 15,000 psi NSCWP*.

Fig. 200
Blue Nut Gray Subs
A precision metal-to-metal sealing surface between male and female subs for air, water, oil, gas and mud service to 2,000 psi NSCWP*.

Fig. 400
Black Nut Red Subs
Features a precision ball and cone sealing surface for sure metal-to metal seal for air, water, oil, gas and mud service to 4,000 psi NSCWP*.

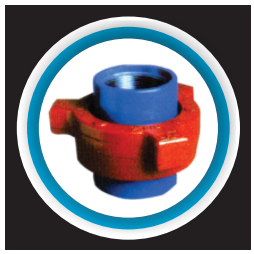

Fig. 1002
Red Nut Blue Subs
A resilient lip-type seal protects ball and cone seal against abrasion in air, water, oil, gas and mud service to 10,000 psi NSCWP*.

Fig. 402
Black Nut Black Subs
A resilient lip-type seal for air, water, oil or mud service to 4,000 psi NSCWP*.

Fig. 2002
White Nut White Subs
For cementing , fracturing, acidizing, testing and choke-and-kill lines where extreme pressures are encountered to 20,000 psi NSCWP*.

Fig. 2202
Green Nut Green Subs
Especially for sour gas service; with heat-treated components, fluoroelastomer seal rings. For service to 15,000 psi NSCWP*.

Hammer Seal Union

MUD TANK - DATA SHEET

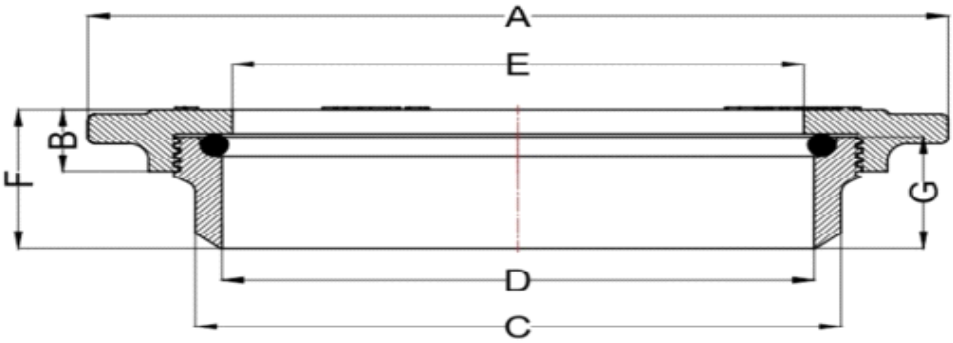

MUD TANK UNION DIMENTION IN MM									
PART NO	A	B	C	D	E	F	G	OILFUILD PIPE SIZE	FEMALE COMPONENT WELD
BHT 3HS	212.8	50.8	114.3	100.0	95.0	89. 0	76.0	3” (88.9MM OD)	4”
BHT 4HS	242.0	50.8	168.3	150.0	122.0	94.0	76.0	4” (114.3MM OD)	6”
BHT 6HS	297.0	50.8	219.2	200.0	175.0	132.0	114.0	6” (168.3MM OD)	8”
BHT 8HS	350.0	50.8	273.0	254.0	225.0	132.0	114.0	8” (219.0MM OD)	10”
BHT 10HS	458.0	50.8	323.8	304.8	280.0	132.0	114.0	10” (273.0MM OD)	12”
BHT 12HS	502.0	50.8	355.6	333.5	330.0	132.0	114.0	12” (323.8MM OD)	14”
BHT 14HS	543.0	50.8	406.0	381.0	362.9	119.0	102.0	14” (355.6MM OD)	16”
BHT 16HS	610.0	50.8	457.0	419.0	413.0	123.0	102.0	16” (406.4MM OD)	18”
BHT 18HS	660.0	58.0	508.0	478.0	463.0	116.0	102.0	18” (457.0MM OD)	20”
BHT 20HS	712.0	58.0	558.0	528.0	514.5	143.0	127.0	20” (508.0MM OD)	22”

Hose Union Fittings

BHT Figure 206 Hose Fitting is constructed of high quality cast ductile iron. This union is also referred to as a Hose Barb Union. It features a union end connection that is interchangeable with a figure 200/206 connection, and it comes with an integral hose shank on both the male and female sub. The figure 206 union is designed to save time and money by eliminating the need to weld a hose nipple onto a figure 200/206 hammer union. This union is uniquely designed to be tested to twice the rated working pressure, which is often a requirement for hoses used in oilfield applications.

Standard Service		H2S Service**	
NSCWP	Test	NSCWP	TEST
400 PSI	800 PSI	400 PSI	800 PSI

*All Working Pressures are Non-shock Cold Working Pressure Ratings (NSCWP)

Integral Union Connections

BHT manufactures a quality line of high-pressure integral union connections in a broad range of configurations and sizes from 2” and 3” and in pressure ratings to 15,000 psi NSCWP*. Manufactured from high strength alloy steel, BHT integrals feature a lightweight design which is not found in competitors' products. All BHT integral union connections are subjected to controlled heat-treat process.

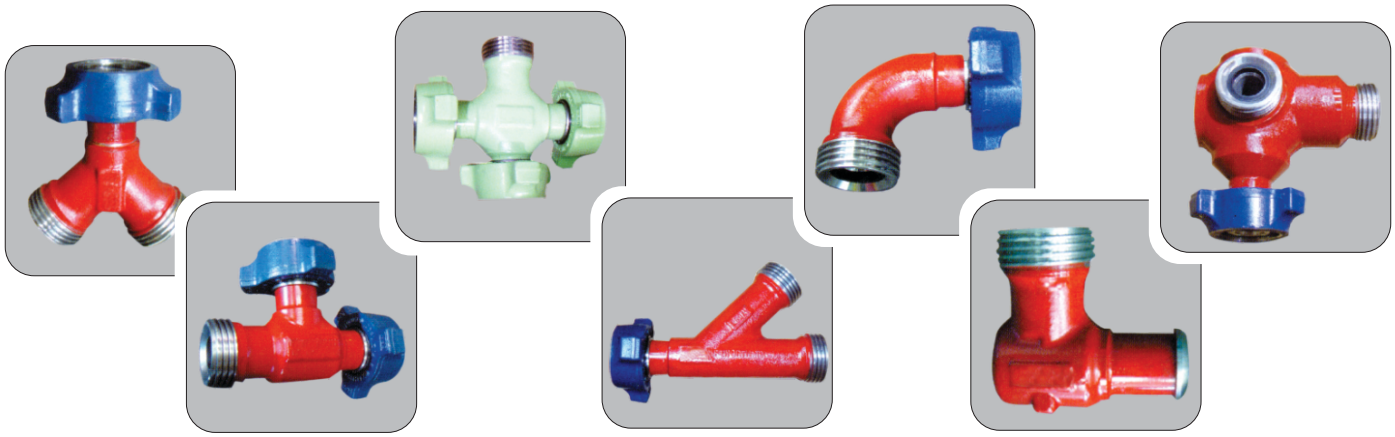

Size	Fig. 602 6,000 psi*	Fig. 1002 10,000 psi*	Fig. 1502 15,000 psi*	Fig. 1502 10,000 psi* H25	Fig. 2002 15,000 psi*	All Female (Thread)	All Male (Wing)	Combination styles and Sizes
2”			●	●	●	●	●	●
3”	●		●	●	●	●	●	●

*Non-Shock Cold Working Pressure

Union Changeover And Crossover Adaptors

Available in a variety of sizes and thread types in female-to-male, female-to female, and male-to-male configurations from 1” thru 4”, in pressure rating from 6,000 to 15,000 psi NSCWP* in standard service, and up to 10,000 psi in sour gas service.

Union Bull, Gauge And Lifting Bull Plugs

Available in a variety of sizes and thread types in female-to-male, female-to female, and male-to-male configurations from 1” thru 4”, in pressure rating from 6,000 to 15,000 psi NSCWP* in standard service, and up to 10,000 psi in sour gas service.

Union Male And Female To Pipe And Tubing Thread Swages

Available in numerous sizes and threaded configurations from 1” thru 4” in pressure rating from 6,000 to 10,000 psi NSCWP*.

Swivel Joints

BHT 2” Fig. 1502 and 3” Fig 1502 Long Radius Swivel Joints have undergone a design enhancement, creating a superior and longer lasting product. New features have created a swivel with extended life while maintaining uniform flow.

New features include:

- Additional erosion material under critical ball race locations.
- More stable assembly with better load distribution in 3” Fig. 1502 series, featuring longer ball race life.
- Better distribution of material for more robust female ball care components in 2” Fig. 1502 and 3” Fig. 1502 models.
- No danger for any mismatches.
- Available in traditional hammer union styles.

All BHT swivel joints feature uniform wall thickness throughout for longer and more uniform flow of fluids (including slurries and abrasives), elastomeric packing for service to instream packing that is designed not to enter stream regardless of velocity and improved lubrication.

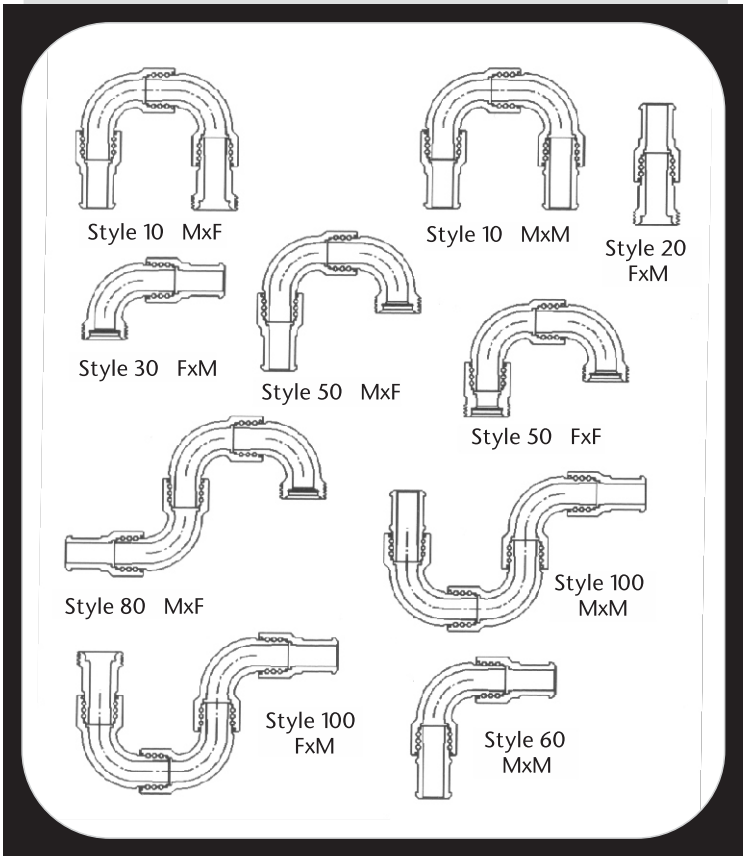

Pressure Rating	Size			
	2”	2” H2S	3	3” H2S
Style 10 Fig. 1502 MxF	●	●	●	●
Style 10 Fig. 1502 MxM	●	●	●	●
Style 20 Fig. 1502 MxF	●	●	●	●
Style 30 Fig. 1502 MxF	●	●	●	●
Style 50 Fig. 1502 MxF	●	●	●	●
Style 60 Fig. 1502 MxF	●	●	●	●
Style 80 Fig. 1502 MxF	●		●	●
Style 50 Fig. 602 MxF				
Style 100 Fig. 1502 MxF	●	●	●	
Style 100 Fig. 1502 MxM	●	●	●	

Swivel Joint / Short Radius

- Size : 2"
- End Type : customized
- Test Pressure : 9,000psi
- CWP : 6,000psi (413.68 bar)
- Service : Standard, H_2S
- Used for Cementing, Drill Mud, Fracturing Fluids, Well Servicing
- MTR and Test Report are offered at any time

Swivel Joint Short Radius
Repair Kit

NO	Item	Q'ty
-	Repair Kit Set	-
1	O-ring	1
2	Pressure Seal	1
3	Ball	52
4	Nipple Nut O-ring	1
5	Nipple Nut	1
6	Grease Fitting	1


Style 10


Style 20


Style 30


Style 40


Style 50


Style 60


Style 70


Style 80

Hose Loops

BHT hose loops are used for a variety of high pressure well service applications including discharge lines, water lines, cementing and circulating lines, well test lines and temporary flow lines.

BHT hoses utilize field proven BHT swivel joints for greater flexibility, shock and vibration resistance, and more uniform flow. Also utilized are BHT wing union end connections for fast, pressure tight make-up and break-out.

These rugged hoses handle a full range of fluids to cold working pressures up to 15,000 psi and come in sizes and configurations to meet any need. Hoses for sour gas service are available at cold working pressure up to 10,000 psi. OFE hoses are designed to easily and conveniently fold up for storage and transportation.

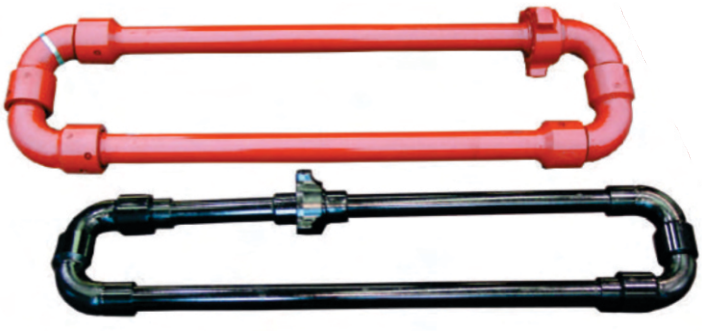

BHT Model	Color Code	Method of Construction			NSCWP* (PSI)	Size (In.)	
		Threaded	NPS	Integral		2	3
Long Radius Swivel Joints	Olive Green†		●	●	10,000	●	●
	Red		●	●	15,000	●	●
Long Radius Swivel Joints	Black	●			10,000	●	

† Sour Gas Service

*Non-Shock Cold Working Pressure

Steel Hoses (Pup Joint)

OFE Integral pup joints with wing union end connections for an uninterrupted and greater flow.

Integral PUP Joints

This light weight piping is available in lengths up to 10 feet to handle fluids at cold working pressure to 15,000 psi. They are used on high-pressure discharge lines, auxiliary flow lines, choke-and-kill lines and for abrasive applications.

NPST Pup joint

BHT also manufactures flow line piping in non-pressure seal thread from 6,000 to 15,000 psi, up to 20 feet in length.

Integral Style

Size (In.)	Type of Service	NSCWP* (PSI)	End Connection
2	Standard	15,000	Fig. 1502 Union
2	Sour Gas	10,000	Fig. 1502 Union
3	Standard	15,000	Fig. 1502 Union
3	Sour Gas	10,000	Fig. 1502 Union

NPS & Butt Weld Piping

Style	NSCWP* (PSI)	1″	1½″	2″	3″	Non Press Seal	Butt Weld
Fig. 602	6,000	●	●		●	●	●
Fig. 1002	10,000	●	●	●		●	●
Fig. 1502†	10,000	●	●	●	●		●
Fig. 1502	15,000	●	●	●	●	●	●

*Non-Shock Cold Working Pressure
†Sour Gas Service

API 5CT PUP JOINTS

SIZE:

2-3/8", 2-7/8", 3-1/2" and 4-1/2"

GRADE:

H-40, J-55, K-55, N-80(1), N-80(Q), L-80(1), L-80(13Cr), L-80(9Cr) and P-110

THREAD:

EUE and NUE

CONNECTION:

PIN x PIN, PIN x BOX, BOX x BOX

Pup Joint Size	Non Upset End	Ext Upset End	Wall Thick-ness	Outside Diameter	Outside Dia D4 for EU Pup Joints	Inside Di-ameter	Lengths
Inch	ppf	ppf	Inch	Inch	Inch	Inch	Feet
1.66	2.30	2.40	0.140	1.660	1.812	1.380	2, 4, 6, 8, 10, 12, 15
1.66	3.03	3.07	0.190	1.660	1.812	1.278	2, 4, 6, 8, 10, 12, 15
1.9	2.75	2.90	0.145	1.990	2.094	1.650	2, 4, 6, 8, 10, 12, 15
1.9	3.65	3.73	0.200	1.990	2.094	1.610	2, 4, 6, 8, 10, 12, 15
2-3/8	4.60	4.70	0.190	2.375	2.594	1.995	2, 4, 6, 8, 10, 12, 15
2-3/8	5.80	5.95	0.254	2.375	2.594	1.867	2, 4, 6, 8, 10, 12, 15
2-3/8	7.35	7.45	0.336	2.375	2.594	1.703	2, 4, 6, 8, 10, 12, 15
2-7/8	6.40	6.50	0.217	2.875	3.094	2.441	2, 4, 6, 8, 10, 12, 15
2-7/8	7.80	7.90	0.276	2.875	3.094	2.323	2, 4, 6, 8, 10, 12, 15
2-7/8	8.60	8.70	0.308	2.875	3.094	2.259	2, 4, 6, 8, 10, 12, 15
2-7/8	9.35	9.45	0.340	2.875	3.094	2.195	2, 4, 6, 8, 10, 12, 15
3-1/2	9.20	9.30	0.254	3.500	3.750	2.992	2, 4, 6, 8, 10, 12, 15
3-1/2	12.70	12.95	0.375	3.500	3.750	2.750	2, 4, 6, 8, 10, 12, 15
4	10.70	11.00	0.262	4.000	4.250	3.476	2, 4, 6, 8, 10, 12, 15
4-1/2	12.60	12.75	0.271	4.500	4.750	3.959	2, 4, 6, 8, 10, 12, 15

Note: We manufacture Pup Joints of Odd Lengths and custom lengths as per Customer requirements

API 5CT Couplings

- API Tubing Couplings: 1” – 4-1/2” EUE – NUE
- API Casing Couplings: 4-1/2” – 20” STC – LTC – BTC
- Grades: H-40, J-55, K-55, N-80, L-80, T-95, P-110, C-110, Q-125
- Improved Buttress Couplings
- Modified Couplings
- Special Clearance Couplings
- Custom sizes and lengths available

Tubing Couplings

API EUE Tubing Couplings	Tubing Size (inches)	Coupling Size OD (inches)	Length (inches)	Weight per Piece (lbs)	Palletized Carton Quantity	Palletized Carton Weight
	2-3/8	3.063	4.875	3.42	1,444	3942
	2-7/8	3.668	5.500	5.29	792	4220
	3-1/2	4.500	5.750	9.02	448	3860
	4-1/2	5.563	6.500	13.31	252	3456
API NUE Tubing Couplings 	2-3/8	2.875	4.500	2.82	1,512	4264
	2-7/8	3.500	5.500	5.15	800	4120
	3-1/2	4.250	5.675	8.17	502	4101
	4-1/2	5.200	6.500	10.76	252	2712

Casing Couplings

API Casing Couplings Short Thread	Casing Size OD (inches)	Coupling Size OD (inches)	Length (inches)	Weight per Coupling (lbs)	Palletized Carton Quantity	Palletized Carton Weight
	4-1/2	5.000	6.250	8.05	343	2716
	5	5.563	6.500	10.18	210	2168
	5-1/2	6.050	6.750	11.44	216	2501
	6-5/8	7.390	7.250	19.97	115	2322
	7	7.875	7.250	18.34	120	2231
	7-5/8	8.500	7.500	26.93	80	2322
	8-5/8	9.625	7.750	35.58	60	2132
	9-5/8	10.625	7.750	39.51	50	2006
	10-3/4	11.750	8.000	49.61	45	2079
	11-3/4	12.750	8.000	50.49	35	1767
	13-3/8	14.375	8.000	56.23	25	1436
	16	17.000	9.000	78.98		
	20	21.000	9.000	98.25		
API Casing Couplings Long Thread 	4-1/2	5.000	7.000	9.07	294	2697
	5	5.563	7.750	12.56	210	2573
	5-1/2	6.050	8.000	14.03	180	2555
	6-5/8	7.390	8.750	24.82	100	2315
	7	7.875	9.000	23.67	100	2351
	7-5/8	8.500	9.250	34.23	80	2807
	8-5/8	9.625	10.000	47.48	48	2337
	9-5/8	10.625	10.500	55.77	40	2302
API Casing Couplings Buttress Thread 	4-1/2	5.000	8.875	10.11	196	2007
	5	5.563	9.125	12.99	144	2840
	5-1/2	6.050	9.250	14.14	144	2061
	6-5/8	7.390	9.625	24.46	92	2295
	7	7.875	10.000	23.22	80	2068
	7-5/8	8.500	10.375	64.84	64	2221
	8-5/8	9.625	10.625	45.94	48	2414
	9-5/8	10.625	10.625	50.99	40	2256
	10-3/4	11.750	10.625	56.68	40	2307
	11-3/4	12.750	10.625	61.74	36	2179
	13-3/8	14.375	10.625	69.95	20	1429
	16	17.000	10.625			
	18-5/8	20.000	10.625			
	20	21.000	10.625			

Plug Valves

- Standard service is used up to 15,000psi and tested at 22,500psi
- H2S service is used up to 10,000psi and tested at 15,000psi
- Rugged Construction with Forged Alloy Steel Body
- Reliable Performance at high working pressure
- Bottom Entry design, Top Entry design, Easy Maintenance
- Valve Parts are Interchangeable with most major designs
- Suiteeable for variety of high pressure applications such as fracturing, cementing, acidizing and etc.
- Each valve is serialized
- MTR and Test Report are available at any time

Plug Valve

NO	Item	Q'ty
Ass'y	Plug Valve 1502 HandleType	1
1	Cap Screw	2
2	Washer 1(Small)	2
3	Washer 2(Bigger)	2
4	Handle Adapter	1
5	Stop Bolt	1
6	Stop Collar	1
7	Grease Fittin g	1
8	Body	1
9	Wing Nut	1
10	Segment	3
11	Retainer Ring	1
12	Lip Seal	1
13	Plug Seal	2
14	Plug	1
15	Roll Pin	2
16	Insert	2
17	Insert O-ring	2
18	Adjusting Nut O-ring	1
19	Adjusting Nut	1

Plug Valve Repair Kit

NO	Item	Q'ty
-	Repair kit Set	-
13	Plug Seal	2
14	Plug	1
16	Insert	2
17	Insert O-ring	2
18	Adjusting Nut O-ring	1

Seal Kit Contains No. 13, 17 and 18.

Size	End Connection	Service	Working Pressure	Test Pressure	Operation type	Dimensions (Inch)				
						A	B	C	D	E
2x1	1502 MxF	Standard	15,000	22,500	Handle	10.53	4.74	4.50	4.50	1.00
		H_2S	10,000	15,000						
2x2	LP Thread	Standard	10,000	15,000	Handle	8.50	5.41	5.25	6.85	2.05
	1502 MxF	Standard	15,000	22,500		13.88	5.41	5.26	6.85	1.75
		H_2S	10,000	15,000						
3x3	1502 MxF	Standard	15,000	22,500	Gear	17.00	7.20	-	9.06	3.05
		H_2S	10,000	15,000	Handle			10.95		

* Each size can be changed as customer's requirements.

Relief Valves

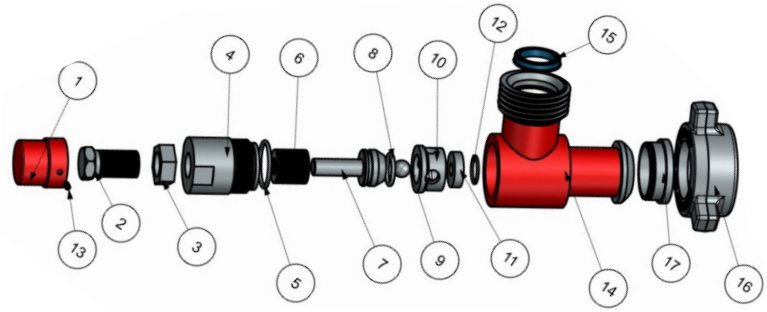

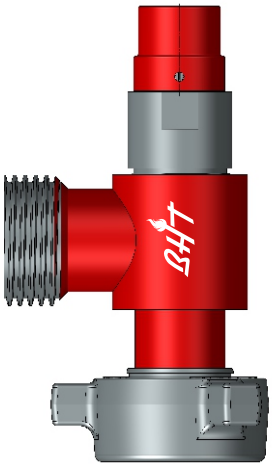

Parts Listing			
Item	Qty.	Description	part
1	1	seal cap	1502200PRVSC
2	1	Adjusting Screw	1502200PRVAS
3	1	Thin Hex Nut, 1-1/2-12 (Jamb Nut)	1502200PRVN
4	1	Cap	1502200PRVC
5	1	O-Ring 038	1502200PRVOR38
6	16	Disk Spring	1502200PRVSDS
7	1	Keeper	1502200PRVSK
8	1	O-Ring 44.45ID, THICKNESS 6	1502200PRVOR4
9	1	Ball	1502200PRVB
10	1	Spider	1502200PRVS
11	1	Seat	1502200PRVSEAT
12	1	O-Ring 028	1502200PRVOR28
13	1	Set Screw, Socket Head, Brass Tip 5/16-18 X 3/32 X 3/16	1502200PRVSH
14	1	Pressure Relief Valve Body	1502200PRVBD
15	1	Union seal	1502200CS
16	1	Wingnut	1502200WN
17	1	segment set	1502200SG

Major Repair kit			
2	1	Adjusting Screw	1502200PRVAS
3	1	Thin Hex Nut, 1-1/2-12 (Jamb Nut)	1502200PRVN
5	1	O-Ring 038	1502200PRVOR38
6	16	Disk Spring	1502200PRVSDS
7	1	Keeper	1502200PRVSK
8	1	O-Ring 44.45ID, THICKNESS 6	1502200PRVOR4
9	1	Ball	1502200PRVB
10	1	Spider	1502200PRVS
11	1	Seat	1502200PRVSEAT
12	1	O-Ring 028	1502200PRVOR28

Minor Repair kit			
9	1	Ball	1502200PRVB
11	1	Seat	1502200PRVSEAT
12	1	O-Ring 028	1502200PRVOR28

Pressure/ Temperature Ratings:					
Inlet	Low Pressure Discharge	Pressure Range	Int. End NSCWP	Service	Temp. Range
2" - 1502M	2" - 1502M	0 - 15000	15000	Standard	-30°C - 110°C
2" - 2002M	2" - 2002F	0 - 20000	20000	Standard	-30°C - 110°C
2" - 1502M	2" - 1502M	0 - 10000	10000	H2S	-30°C - 176°C
2" - 2002M	2" - 2002F	0 - 15000	15000	H2S	-30°C - 176°C

Dark Check Valves

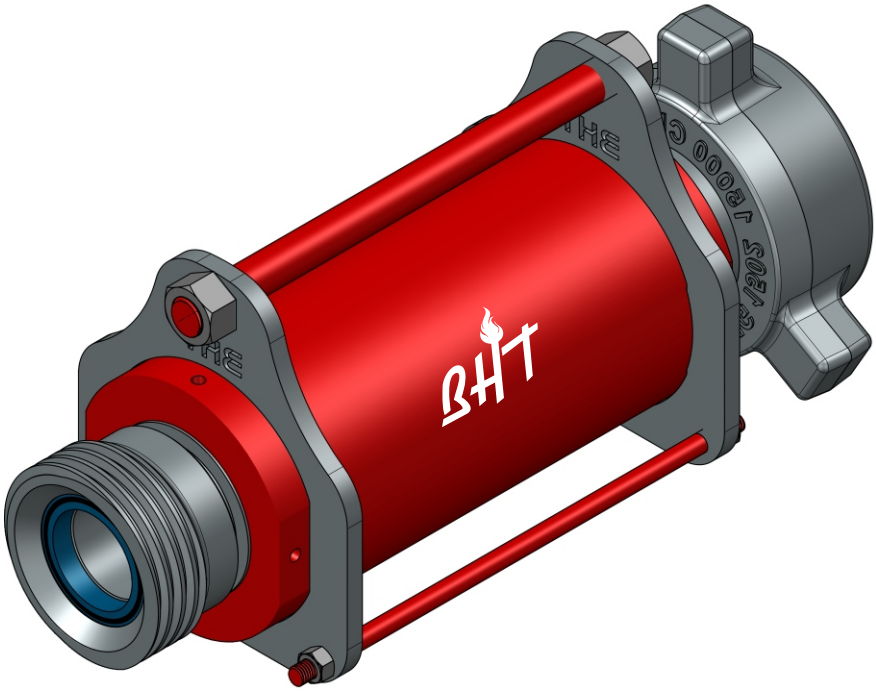

2 " dart type Check Valve for oil equipment

1) Sizes range from 2" to 3". The model of check valve available: D×F70-2"×2",D×F105-2"×2",D×F70-3"×3",D×F105-3"×3"
2) Working pressure rated:5000psi(35MPa)~15000psi(105MPa).
3) Our check valves are mainly used for high pressure applications and workover equipments. They are usually installed in high pressure pipelines for preventing fluid flowing back. When fluid is pushed back, a retainer plate will automatically close.
4) Check valves, forged of high strength alloy steel based on US technologies, are fitted with unions on both ends for easy dismantlement. The retainer plate inside sulfidized with Buna-N has a good sealing effect and a longer service life under high pressure, for conventional or H2S environments.

Product Parameters

Size	Connection	Pressure Class(Psi)	Service
In-Line Flapper Check Valves			
2"	Fig 1502/2002 MxF	15000/20000	STD
3"	Fig 1502/2002 MxF	15000/20000	STD
Top Entry Check Valves			
2"	Fig 1502 M x F	15000	STD
3"	Fig 1502 M x F	15000	STD
Dart Check Valves			
2"	Fig 1502 M x F	15000	STD
3"	Fig 1502 M x F	15000	STD

Choke Valves

2" 1502 Positive Choke Valve

- 2" Fig 1502 MxF with 3/4" or 1" Orifice and 3" Fig 1502 MxF with 2" Orifice.
- Standard service is used up to 15,000psi and tested at 22,500psi
- H2S service is used up to 10,000psi and tested at 15,000psi
- Hammer Union End Connection
- Forged alloy steel body, stainless steel and tungsten carbide parts
- Parts are interchangeable with major brands
- Suiteeable for a broad range of applications including wellheads, well testing, stream injection, choke and kill manifolds and well clean operations, etc.

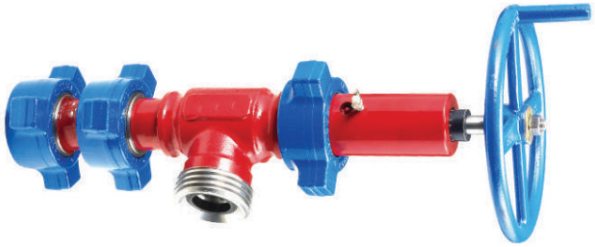

2" 1502 Adjustable Choke Valve

3" 1502 Adjustable Choke Valve

2" Positive Choke Valve

2"Positive Choke Valve

NO	Item	Q'ty
Ass'y	Positive Choke Valve 1502	1
13	Wing Nut	3
14	Lip Seal	2
15	Choke Body	1
16	Plug Stem	1
17	Stem Cap	1
18	Retainer Ring	2
19	Segment	6
20	Choke Bean	1
21	Choke Saver	1
22	Blind Male Sub	1

2"Positive Choke Valve Repair Kit

NO	Item	Q'ty
20	Choke Bean	1

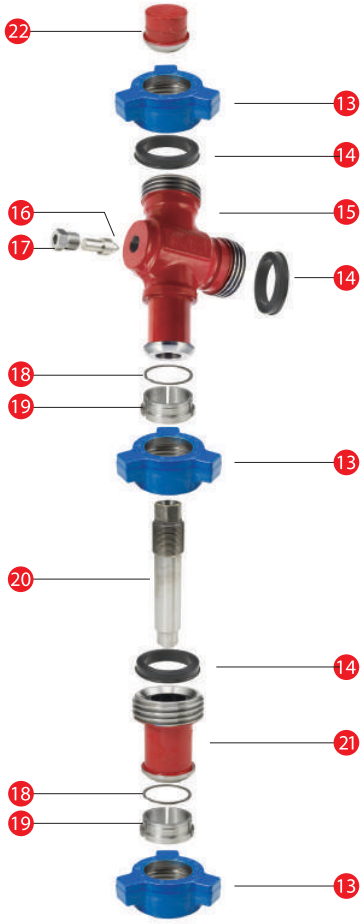

2" Adjustable Choke Valve

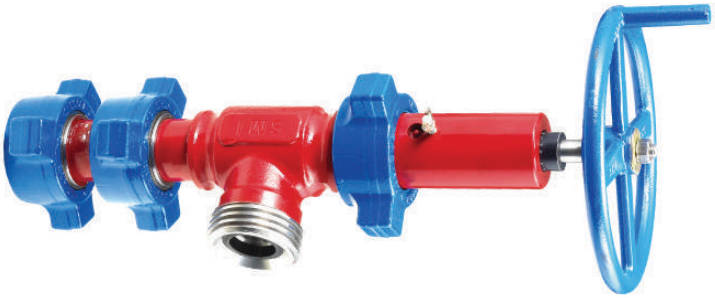

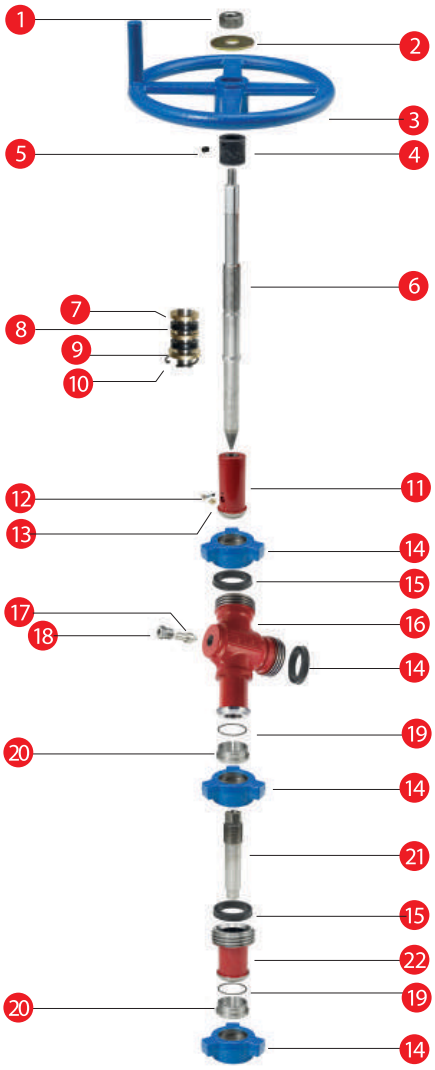

2"Adjustable Choke Valve

NO	Item	Q'ty
Ass'y	Adjustable Choke Valve 1502	1
1	Stem Nut	1
2	Washer	1
3	Hand Wheel	1
4	Indicator	1
5	Lock Screw	1
6	Choke Stem	1
7	Stem Guide	2
8	Stem Seal	2
9	Junk Ring	1
10	Snap Ring	1
11	Choke Bonnet	1
12	Thumb Screw	1
13	Grease Fitting	1
14	Wing Nut	3
15	Lip Seal	2
16	Choke Body	1
17	Plug Stem	1
18	Stem Cap	1
19	Retainer Ring	2
20	Segment	6
21	Choke Seat	1
22	Choke Saver	1

2"Adjustable Choke Valve Repair Kit

NO	Item	Q'ty
-	Repair Kit Set	-
7	Stem Guide	2
8	Stem Seal	2
9	Junk Ring	1
10	Snap Ring	1

* Each size can be changed as customer's requirements.

3" Adjustable Choke Valve

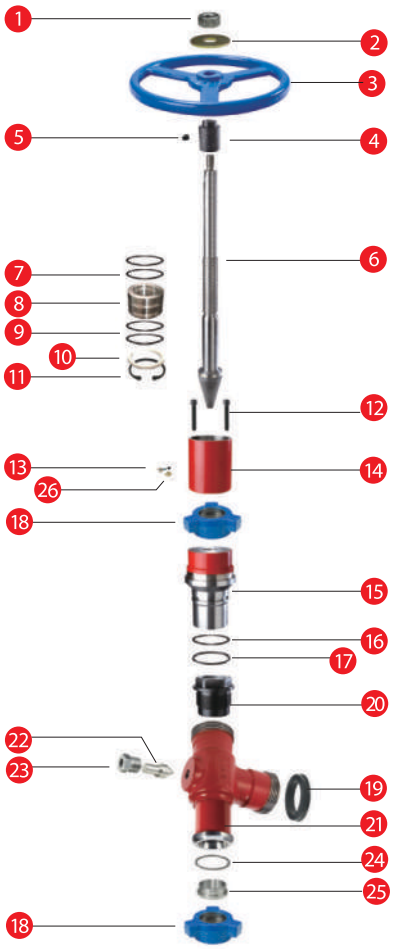

3"Adjustable Choke Valve

NO	Item	Q'ty
Ass'y	Adjustable Choke Valve 1502	1
1	Stem Nut	1
2	Washer	1
3	Hand Wheel	1
4	Indicator	1
5	Lock Screw	1
6	Choke Stem	1
7	Outsider O-ring	2
8	Seal Piston	1
9	Inside O-ring	2
10	Stem Seal	1
11	Snap Ring	1
12	Bonnet Bolt	2
13	Thumb Screw	1
14	Bonnet Extension	1
15	Choke Bonnet	1
16	Bonnet O-ring	1
17	Bonnet Back Up Ring	1
18	Wing Nut	2
19	Lip Seal	1
20	Choke Seat	1
21	Choke Body	1
22	Plug Stem	1
23	Stem Cap	1
24	Retainer Ring	1
25	Segment	3
26	Grease Fitting	1

3"Adjustable Choke Valve Repair Kit

NO	Item	Q'ty
-	Repair Kit Set	-
7	Outsider O-ring	2
8	Seal Piston	1
9	Inside O-ring	2
10	Stem Seal	1
11	Snap Ring	1
16	Bonnet O-ring	1
17	Bonnet Back Up Ring	1

* Each size can be changed as customer's requirements.

API 6A Adjustable Choke Valves

Features:

- Long life and low maintenance.
- Body to bonnet contact behind the O-ring seal eliminates bonnet seal extrusion.
- A locking device is set on stem.
- Ideal for many flow regulating services and easily convertable to a positive choke.
- The stem of adjustable choke are made of high strength alloy steel.The materials have the feature of abrasion resistance, erosion resistance and reliable serviceability.
- The valve and seat can be removed by hand, without special tools and without removal of the valve body from the line, by simply removing the bonnet.

Specifications:

Basic Design and Test	**API-6A**	**ANSI**
Working Pressure	**2000, 3000, 5000, 10000, 15000, 20000 (Psi)**	**400, 600, 900, 1500, 2500 (LB)**
Main Nominal Size(in)	**N60, N62, 1-13/16, 2-1/16, 2-9/16, 3-1/16, 3-1/8, 4-1/16**	**2, 2-1/2, 3, 4, 6, 8**
Product Specification Level	**PSL1, PSL2, PSL3, PSL4**	**PSL1, PSL2, PSL3, PSL4**
Performance Requirement Level	**PR1, PR2**	**PR1, PR2**
Material Class	**AA, BB, CC, DD, EE, FF**	**AA, BB, CC, DD, EE, FF**
End Connection	**Flanged, Thread, Flanged and Thread**	**Flanged, Weld**

Parts List

No	Name	Material
1	O-RING	VITON-B
2	SEAT	AISI 4135
3	DRAIN FITTING	AISI 4140
4	MALE ADAPTER	ASTM A182 F6a
5	V-PACKING	VITON
6	FEMALE ADAPTER	ASTM A182 F6a
7	WING NUT	AISI 4130
8	STEM	AISI 4135
9	HANDWHEEL	ASTM 47
10	INDICATOR	CARBON STEEL
11	LUBRICATOR	CARBON STEEL
12	BONNET	AISI 4130
13	O-RING	VITON-B
14	BODY	AISI 4130

Other trim and body material are available upon request.

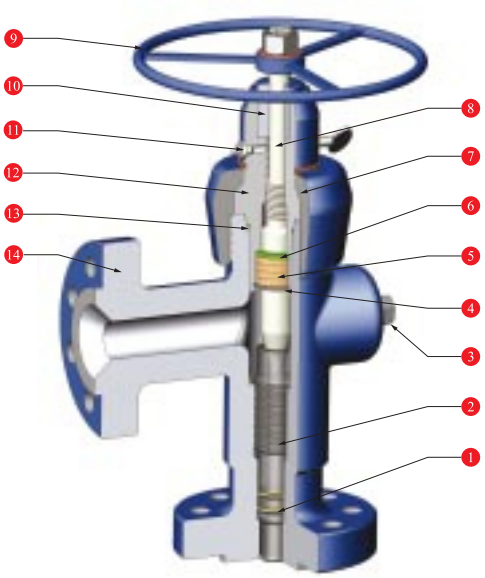

API 6A Positive Choke Valves

Features:

- Body to bonnet contact behind the O-ring seal eliminates bonnet seal extrusion.
- The bean of positive choke are made of ceramic or hard alloy steel. Both have the feature of abrasion resistance, erosion resistance and reliable serviceability.
- Flow bean chamfers are available from 2/64" to 64/64", in 1/64" increments for precise regulation of flow rate.
- The choke bean may be dismantled quickly for change of beans.

Specifications :

Basic Design and Test	**API-6A**
Working Pressure (Psi)	**2000, 3000, 5000, 10000, 15000, 20000**
Main Nominal Size (in)	**1-13/16, 2-1/16, 2-9/16, 3-1/16, 3-1/8, 4-1/16**
Product Specification Level	**PSL1, PSL2, PSL3, PSL4**
Performance Requirement Level	**PR1, PR2**
Material Class	**AA, BB, CC, DD, EE, FF**
End Connection	**Flanged, Thread, Flanged and Thread**

Parts List

No	Name	Material
1	O-RING	VITON-B
2	SEAT	AISI 4135
3	BODY	AISI 4135
4	DRAIN FITTING	AISI 4140
5	WING NUT	AISI 4130
6	O-RING	VITON-B
7	BONNET	AISI 4135
8	GLAND RING	ALLOY STEEL

Other trim and body material are available upon request.

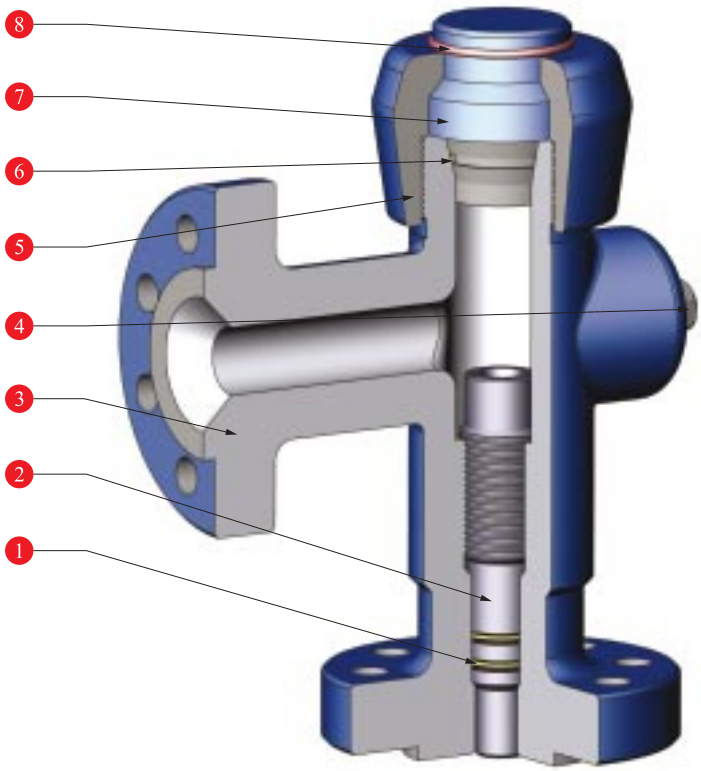

Seat & Stem

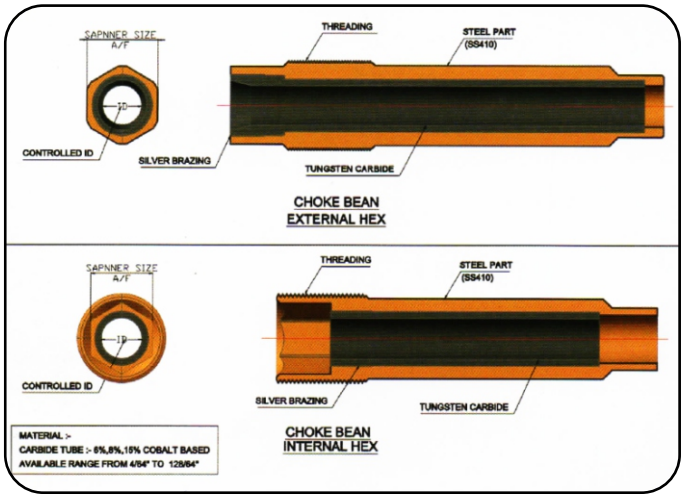

A choke is used to control the flow of fluids and is usually mounted on or close to the christmas tree. High pressure gas/oil, with abrasive sand minerals pass through these chokes at high speed causing a rapid wear. BHT Bean Chokes have steel housings which may be nitrided and are lined with Tungsten Carbide or Zirconia Ceramic inserts, to protect them from corrosive, errosive and abrasive wear.

BHT Bean Chokes are exported all over the world and are known for their international standards. BHT manufactures a wide range of bean chokes to match 'OCT' Type FC140, 'Thronill Craver', 'Gray Tool', 'Cameron' & custom made types. These are mated with a precise diameter seat that forms the choke, through which all the abrasive/ corrosive fluids must pass. Beans are available in complete range of sizes (4/64 to 128/64) generally identified by the choke diameter stated in 64th of an inch. BHT offers Tungsten Carbide / Zirconia lined choke beans & Tungsten Carbide stems for the above makes, other custom designed flanged positive chokes, threaded adjustable chokes & stems/ seats.

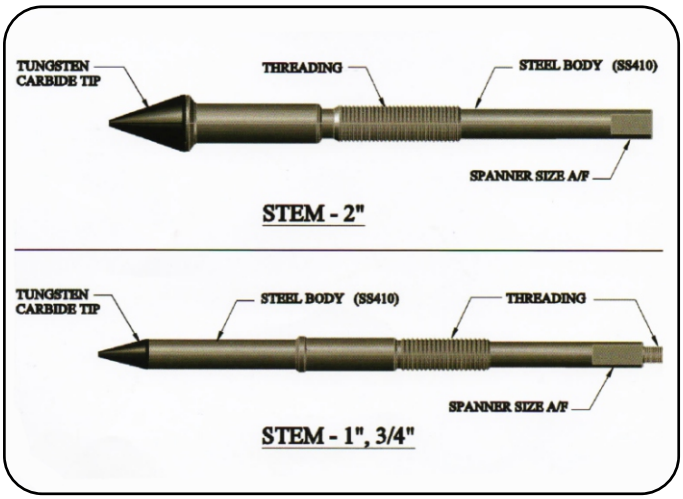

H2 Choke Valve Material Recommendations

API MATERIAL CLASS	Body	Bonnet	Choke Trim (Stem, Seat, Bean)
AA & BB General Service	Alloy steel	Alloy steel	Stainless steel or stainless steel and tungsten carbide
CC Non-Sour, High CO_2	Stainless steel	Stainless steel	Stainless steel or stainless steel and tungsten carbide
DD & EE- 0.5 Sour, Low CO_2 †	Alloy steel	Alloy steel	Stainless steel and tungsten carbide
FF - 0.5 Sour, High CO_2 †c	Stainless steel	Stainless steel	Stainless steel and tungsten carbide
HH High H2S, High CO_2 †	Corrosion resistant alloy	Corrosion resistant alloy	Corrosion resistant alloy and tungsten carbide

*In compliance with NACE Standard MR-01-75

Tungsten Carbide - Seat & Assembly

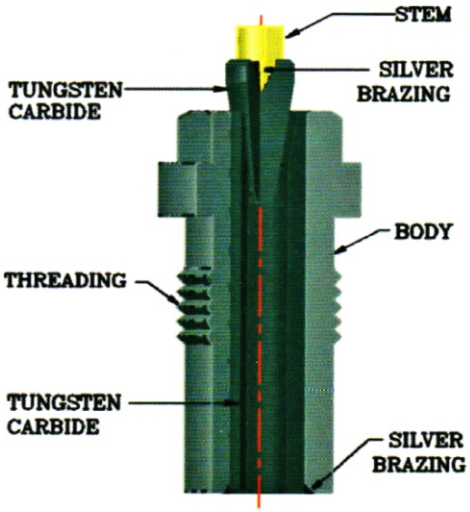

H2 Choke Valve Available Sizes and Pressures

NOMINAL SIZE, IN	Available Needle/Max. Orifice Size, in	Pressure Range, psi
2	1	2,000–10,000
2	1	15,000
3	2	2,000–10,000
4	3	2,000–5,000

Various Types of Choke Bean

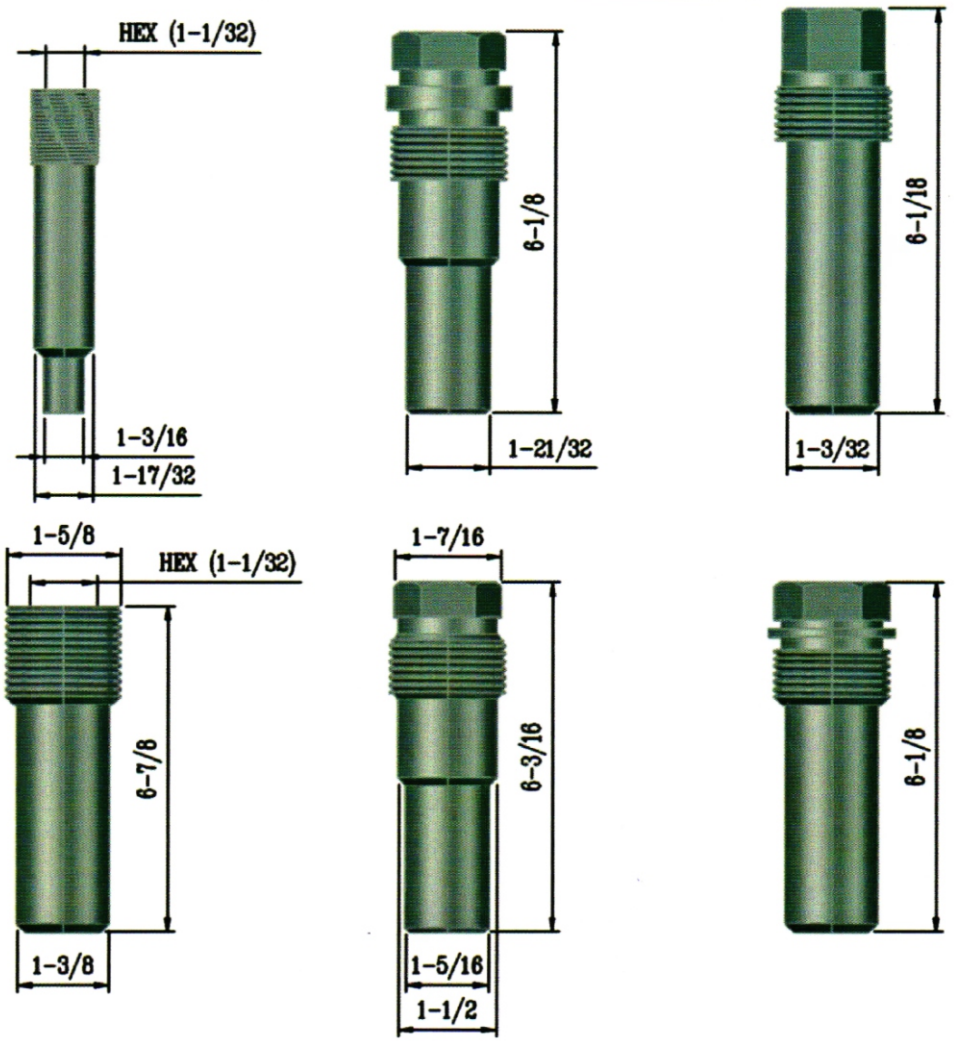

Adapters Flanges

BHT Wellhead Flange Adapters are designed to be used in the upper most position on wellheads and therefore enables wireline and other well service operations to be performed through the wellhead into the well bore.
BHT Wellhead Flange Adapters are available in various bore sizes and with quick union connections compatible with Bowen and Otis type quick unions. Additionally, Flange / Adapters are supplied for standard or H2S service and working pressure up to 15,000 psi.

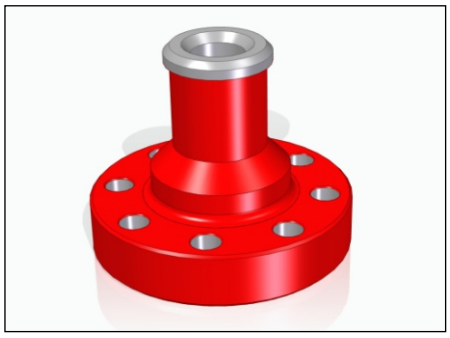

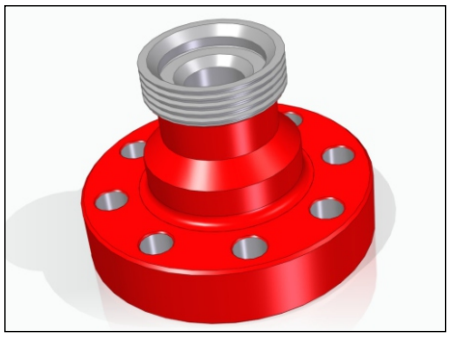

API 6A Flanges

BHT is a manufacturer of various types of Flanges and Pipe Fittings required by the oilfield, petrochemical and different process industries. Our name in synonymous with high quality manufacturing, precision machining and unparalleled dedication to quality excellence which has kept us in the fore front of the oil industry.

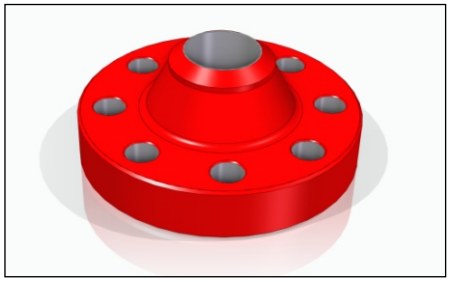

Weld Neck Flange

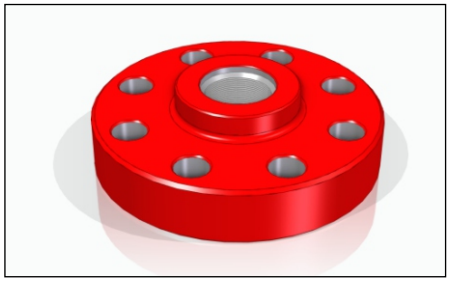

Threaded Flange

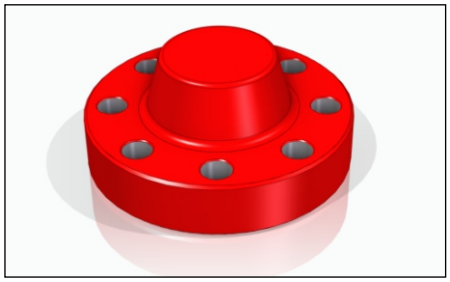

Blind Flange

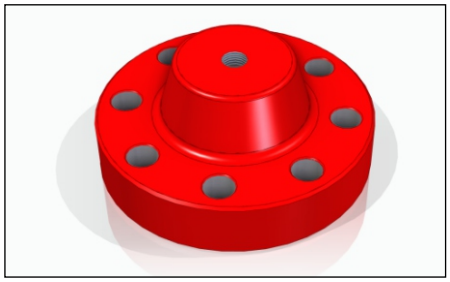

Test Blind Flange

API 6A Ring Gaskets

Precision Finish

- Material Stainless Steel, Low Carbon or Inconel.
- Dual Certification for low Carbon
- Full Traceability

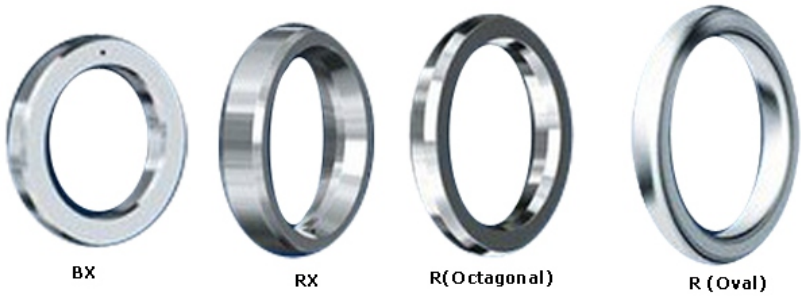

API 6A Spec Flange Bolt & Ring Chart

API Pressure Rating	Flange Size & Bore	Ring Gasket		Number of Studs	Stud Dimensions	
					Diameter	Length
2000 lb	2 1/16"	R-23	RX-23	8	5/8"	4 3/4"
	2 9/16"	R-26	RX-26	8	3/4"	5 1/4"
	3 1/8"	R-31	RX-31	8	3/4"	5 1/2"
	4 1/16"	R-37	RX-37	8	7/8"	6 1/4"
	5 1/8"	R-41	RX-41	8	1"	7 1/4"
	7 1/16"	R-45	RX-45	12	1"	7 1/2"
	9"	R-49	RX-49	12	1 1/8"	8 1/2"
	11"	R-53	RX-53	16	1 1/4"	9 1/4"
	13 5/8"	R-57	RX-57	20	1 1/4"	9 1/2"
	16 3/4"	R-65	RX-65	20	1 1/2"	10 3/4"
	21 1/4"	R-73	RX-73	24	1 5/8"	12 1/2"
6BX	26 3/4"	BX-167		20	1 3/4"	14 1/4"

API Pressure Rating	Flange Size & Bore	Ring Gasket		Number of Studs	Stud Dimensions	
					Diameter	Length
3000 lb	2 1/16"	R-24	RX-24	8	7/8"	6"
	2 9/16"	R-27	RX-27	8	1	7"
	3 1/8"	R-31	RX-31	8	7/8"	6 1/4"
	4 1/16"	R-37	RX-37	8	1 1/8"	7 1/2"
	5 1/8"	R-41	RX-41	8	1 1/4"	8 1/4"
	7 1/16"	R-45	RX-45	12	1 1/8"	8 1/2"
	9"	R-49	RX-49	12	1 3/8"	9 1/2"
	11"	R-53	RX-53	16	1 3/8"	10"
	13 5/8"	R-57	RX-57	20	1 3/8"	10 3/4"
	16 3/4"	R-66	RX-66	20	1 5/8"	12 1/4"
	20 3/4"	R-74	RX-74	20	2"	15"
6BX	26 3/4"	BX-168		24	2"	17 1/2"

API Pressure Rating	Flange Size & Bore	Ring Gasket		Number of Studs	Stud Dimensions	
					Diameter	Length
5000 lb	2 1/16"	R-24	RX-24	8	7/8"	6 1/4"
	2 9/16"	R-27	RX-27	8	1"	7"
	3 1/8"	R-35	RX-35	8	1 1/8"	7 3/4"
	4 1/16"	R-39	RX-39	8	1 1/4"	8 1/2"
	5 1/8"	R-44	RX-44	8	1 1/2"	10 3/4"
	7 1/16"	R-46	RX-46	12	1 3/8"	11 1/4"
	9"	R-50	RX-50	12	1 5/8"	12 1/2"
	11"	R-54	RX-54	12	1 7/8"	14 1/2"
	13 5/8"	BX-160		16	1 5/8"	12 3/4"
	16 3/4"	BX-162		16	1 7/8"	14 3/4"
	18 3/4"	BX-163		20	2"	17 1/2"
6BX	21 1/4"	BX-165		24	2"	18 3/4"

API Pressure Rating	Flange Size & Bore	Ring Gasket	Number of Studs	Stud Dimensions	
				Diameter	Length
10000 lb	1 13/16"	BX-151	8	3/4"	5 1/4"
	2 1/16"	BX-152	8	3/4"	5 1/2"
	2 9/16"	BX-153	8	7/8"	6 1/4"
	3 1/16"	BX-154	8	1"	7 1/4"
	4 1/16"	BX-155	8	1 1/8"	8 1/4"
	5 1/8"	BX-169	12	1 1/8"	9"
	7 1/16"	BX-156	12	1 1/2"	11 3/4"
	9"	BX-157	16	1 1/2"	13 1/4"
	11"	BX-158	16	1 3/4"	15 1/2"
	13 5/8"	BX-159	20	1 7/8"	17 3/4"
	16 3/4"	BX-162	24	1 7/8"	17 3/4"
	18 3/4"	BX-164	24	2 1/4"	22 1/2"
6BX	21 1/4"	BX-166	24	2 1/2"	24 1/2"

API Pressure Rating	Flange Size & Bore	Ring Gasket	Number of Studs	Stud Dimensions	
				Diameter	Length
15000 lb	1 13/16"	BX-151	8	7/8"	5 3/4"
	2 1/16"	BX-152	8	7/8"	6 1/4"
	2 9/16"	BX-153	8	1"	7"
	3 1/16"	BX-154	8	1 1/8"	8"
	4 1/16"	BX-155	8	1 3/8"	9 1/2"
	5 1/8"	BX-169	12	1 1/2"	11 1/2"
	7 1/16"	BX-156	16	1 1/2"	13"
	9"	BX-157	16	1 7/8"	15 3/4"
	11"	BX-158	20	2"	19 1/2"
	13 5/8"	BX-159	20	2 1/4"	21"
6BX	18 3/4"	BX-164	20	3"	26 3/4"

API Pressure Rating	Flange Size & Bore	Ring Gasket	Number of Studs	Stud Dimensions	
				Diameter	Length
20000 lb	1 13/16"	BX-151	8	1"	7 3/4"
	2 1/16"	BX-152	8	1 1/8"	8 1/2"
	2 9/16"	BX-153	8	1 1/4"	9 1/2"
	3 1/16"	BX-154	8	1 3/8"	10 1/4"
	4 1/16"	BX-155	8	1 3/4"	12 1/4"
	7 1/16"	BX-156	16	2"	17 3/4"
	9"	BX-157	16	2 1/2"	21 3/4"
	11"	BX-158	16	2 3/4"	23 3/4"
6BX	13 5/8"	BX-159	20	3	30"

RESILIENT SEATED WAFER DESIGN CENTRIC BUTTERFLY VALVES

DESIGN FEATURES	
Our Size Range	NPS 1 ½" to 12"
	DN 40 to 300
Temperature Range	-20°F to 250°F
	-29°C to 121°C
Maximum Operating Pressure	High Pressure PN16
	250 psi / 17.2 bar
	Standard Disc PN10
	175 psi / 12 bar
Body Style	One - Piece Wafer
	One - Piece Lug
	One piece investment Cast Wafer
	One piece investment Cast Lug
Sleeve/Seat Style	Tongue and Grooved Replaceable. The tongue and groove lock the seat in place and make the valve dead end capable.
Mounting Flange	Our design includes gear operation, pneumatic and electrical actuators mount directly to FFC resilient seated valves. No bracket are required.
Leakage Rate	Bubble tight

DESIGN STANDARDS	
Valve Design	API 609 (Category A)
	IS 13095
	ASME B 16.34
	BS EN-593
Face-to-Face	API 609
	IS 13095
	ISO 5752
Seat Tightness Test	API 598
	API 6D
	BS EN 12266-1
Top Mounting Flange	ISO 5211
Flange Drilling	ASME B16.5 Class 125/150
	EN 1092-1 PN 6| 10 |16
	JIS 10 K
	AS 2129 Table D & E

MATERIAL AVAILABILITY	
Shell	CI , SG Iron, WCB, CF8, CF3, CF8M, CF3M, Duplex, Super Duplex, Aluminum Bronze, etc.
DISC	SG Iron, SS304, SS304L, SS316, SS316L, Duplex Stainless Steel 4A, Super Duplex Stainless Steel 5A, Aluminum Bronze, etc.
SEAT	EPDM, BUNA-N(Black or White), Neoprene, Viton (FKM), etc.

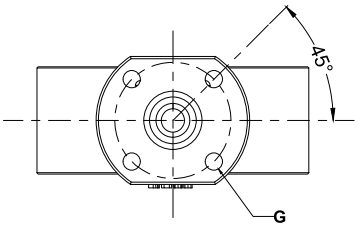

FOR 2" TO 6"

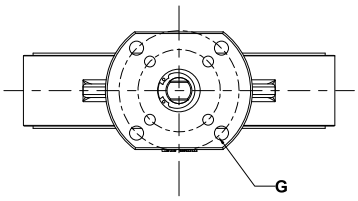

FOR 8" TO 12"

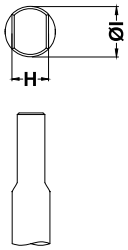

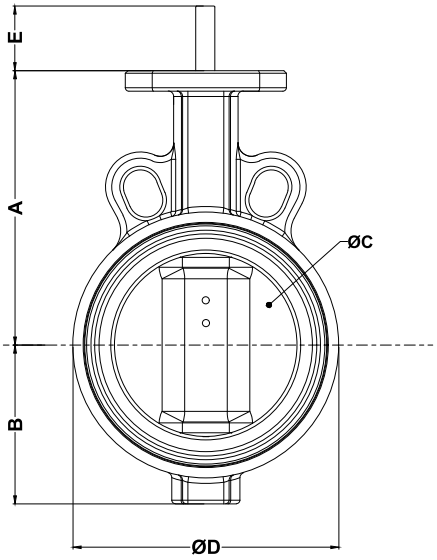

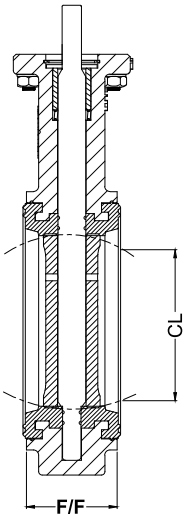

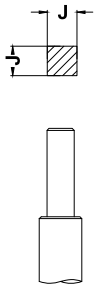

BARE SHAFT VIEW

DIMENSIONS

DN/NPS MM/INCH	F/F	A	B	C	ØD	E	Mounting Flange			Bolt Circle PCD		H	ØI	CL	SQ. FOR BARE VIEW (J X J)
							G	No. of Holes	Hole Dia	ISD 7005 PCD	ASME B16.5 PCD				
40/1.5"	33	86	46	41	71	30	F5	4	7.5	110	98.4	10	14	20.54	9
50/2"	43	114	58	53	93	29.5	F5	4	7.5	125	120.7	10	14	26.16	9
65/2.5"	46	110	64	65	99	29.5	F5	4	7.5	145	139.7	10	14	42.15	9
80/3"	46	128	73	80	119	29.5	F5	4	7.5	160	152.4	10	14	63.06	9
100/4"	52	154	89	104	150	28	F7	4	9	180	190.5	11	16	88	11
125/5"	56	170	104	125	171	29	F7	4	9	210	215.9	13	19	110.08	11
150/6"	56	190	120	151	204	29	F7	4	9	240	241.3	13	19	138	11
200/8"	60	214	151	199	267	30	F7/F10	4	9/11	295	298.5	16	22	187.35	14
250/10"	68	251	185	249	308	32	F10/F12	4	11/14	350	362	20	28	240.99	22
300/12"	78	289	214	299	361	32	F10/F12	4	11/14	400	431.8	22	30	289.68	22

VALVE PARTS

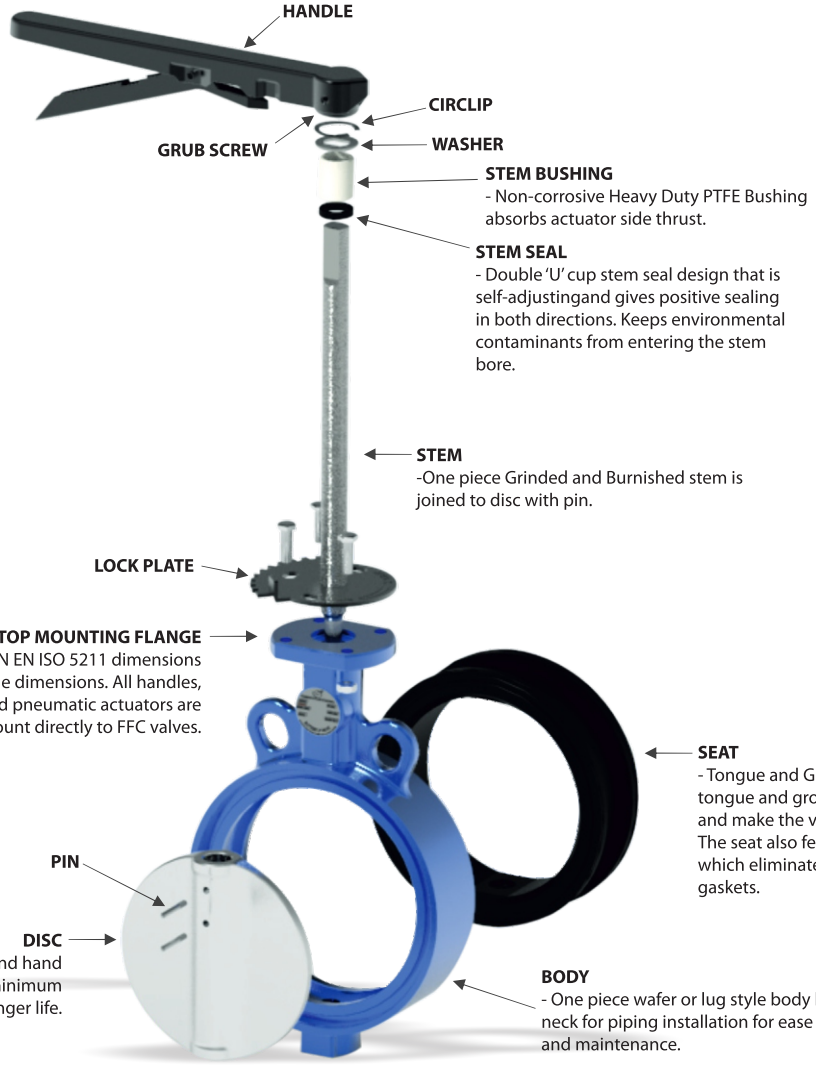

SEAT SELECTION GUIDE

SEAT TYPE	TEMPERATURE RANGE		CHARACTERISTICS
EPDM / WHITE EPDM	-20°F(-19°C)	250°F(121°C)	EPDM (Ethylene Propylene Diene Monomer) seats have a higher resistance to abrasion, lower compression set, and higher temperature capabilities than sulphur cured seats.
BUNA-N (BLACK OR WHITE) NBR / Nitrile	0°F(-18°C)	212°F(100°C)	BUNA-N is the commonly used name for Nitrile synthetic rubber. Nitrile is a copolymer of acrylonitrile and butadiene. BUNA-N is sometimes referred to as NBR, Nitrile, or Hycar. BUNA-N is a general-purpose seat material particularly suitable for hydrocarbon service. BUNA N is also available in Food grade for sanitary applications
VITON (FKM)	0°F(-18°C)	392°F(200°C)	FKM has some outstanding characteristics such as improved acid, oil, and temperature resistance over other seat materials.
NEOPRENE	0°F(-18°C)	180°F(82°C)	Neoprene is an all-purpose polymer with desirable characteristics including high resiliency with low compression, resistance to vegetable and animal oil, and flame resistance. This sealing material is excellent for refrigerants, ammonia and Freon, and is principally used in pulp and (non-bleached) paper lines. Neoprene is not recommended for strong oxidizing acids, chlorinated solvents, esters, ketones, aromatic hydrocarbons or hydraulic fluids. White neoprene is generally used in sanitary applications while the black grade provides better abrasion and oil resistance.
SILICON	-40°F(-40°C)	356°F(180°C)	Silicone Rubber has good resistance to high temperature and low temperature and its chemical is stable. It is recommended for foods, strong acids and weak alkalis

RESILIENT SEATED LUG DESIGN CENTRIC BUTTERFLY VALVE

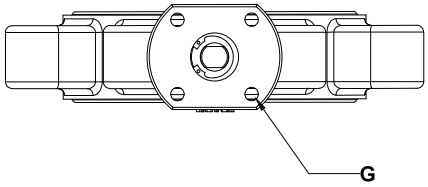

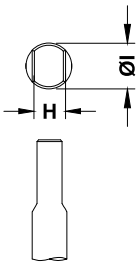

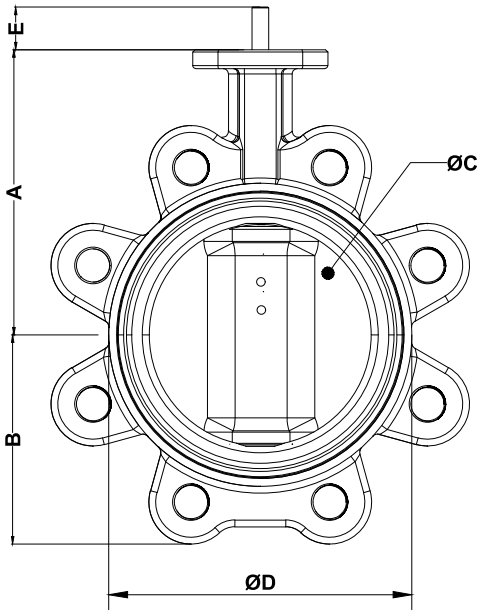

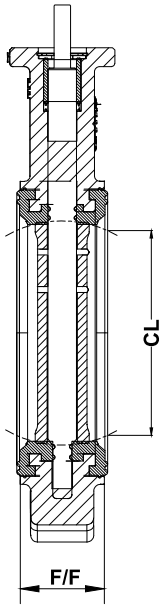

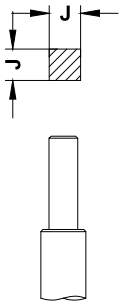

BARE SHAFT VIEW

DIMENSIONS

DN/NPS MM/INCH	A	B	C	ØD	F/F	E	Mounting Flange			Bolt Circle PCD			H	ØI	CL	SQ. FOR BARE VIEW (J X J)
							G	No. of Holes	Hole Dia	ISD 7005 PCD	ASME B16.5 PCD	Threads UNC-2B				
40/1.5"	86	46	41	71	33	30	F5	4	7.5	110	98.4	1/2-13	10	14	20.54	9
50/2"	114	58	53	93	43	29.5	F5	4	7.5	125	120.7	5/8-11	10	14	26.16	9
65/2.5"	110	64	65	99	46	29.5	F5	4	7.5	145	139.7	5/8-11	10	14	42.15	9
80/3"	128	73	80	119	46	29.5	F5	4	7.5	160	152.4	5/8-11	10	14	63.06	9
100/4"	154	89	104	150	52	28	F7	4	9	180	190.5	5/8-11	11	16	88	11
125/5"	170	104	125	171	56	29	F7	4	9	210	215.9	3/4-10	13	19	110.08	11
150/6"	190	120	151	204	56	29	F7	4	9	240	241.3	3/4-10	13	19	138	11
200/8"	214	151	199	267	60	30	F7/F10	4	9/11	295	298.5	3/4-10	16	22	187.35	14
250/10"	251	185	249	308	68	32	F10/F12	4	11/14	350	362	7/8-9	20	28	240.99	22
300/12"	289	214	299	361	78	32	F10/F12	4	11/14	400	431.8	7/8-9	22	30	289.68	22

TORQUE INFORMATION

TORQUE RATING(NM) FOR Rubber Line Wafer Butterfly Valve:-

VALVE	PRESSURE	1½"	2"	2½"	3"	4"	5"	6"	8"	10"	12"
FULL	3.5	7	7	13	14	28	42	56	98	157	258
RATED	7	8	8	14	18	29	45	62	113	175	304
PRESSURE	10	8	8	14	18	29	46	63	117	190	323
VALVE BAR	12	12	12	18	23	33	51	70	125	209	354
(PSI)	16	17	17	22	32	44	63	105	201	306	450

Installation

The valves shall never be installed where service conditions could exceed the valve ratings concerning pressure, temperature or operating media. Failure to comply with this warning may result in personal injury or property damage.

Installation Instructions

1. Check the valve identification tag to make sure the pressure and valve materials are correct for the application.
2. Make sure the pipe line has sufficient support in order to prevent vibrations and load weight from damaging the valve.
3. Make sure pipes are aligned.
4. Make sure the pipe flanges and valve sealing faces are clean from any debris.
5. Spread the flanges enough to allow the butterfly valve to fit with partly opened disc (5-10 degrees).

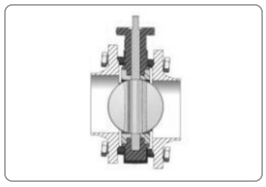

6. Fix the valve (without any gaskets) with the bolts - without tighten them - open the disc to a fully open position and make sure it will not be in contact with the pipe.

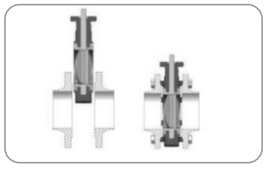

7. Tighten each bolt crosswise according to below figure,

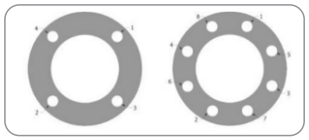

OPERATING OPTIONS

LEVER OPERATED

MANUAL GEAR OPERATED

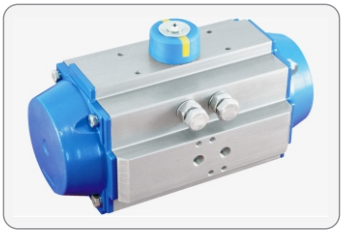

PNEUMATIC ACTUATED

ELECTRICAL ACTUATED

PISTON VALVE

DESIGN FEATURE

Design and Manufacturing : ASME B16.34/API 602/IBR-1950
Inspection and Testing : API 598
Face to Face Standard for General Valves : As per Manufacturer's Standard
Face to Face Standard for Flanged Valves : ASME B16.10
Flange Standard : ASME B16.5
Socket Weld Standard : ASME B16.11
Screwed End Standard : ASME B1.20.1 (Screwed to NPT Female, BSP Female, BSPT Female)
Butt Weld Standard : ASME B16.25 (Schedule 40, 80)
Special Feature :

- Bubble Tight (ANSI leakage class VI) Shut off
- Can be used for throttling applications
- Robust and maintenance free
- Long service life
- Effective sealing area is large, as compared to the conventional linear movement valves
- Performance is not affected by presence of dirt or any other impurities in the media
- Compensates for thermal expansions with reinforced, Grafoil sealing rings and Belleville washers
- Can be easily serviced inline
- Easy to repair: The only wearing parts are sealing rings which are easily replaceable.
- Low cost of ownership (Cost of ownership includes maintenance, inventory cost in addition to the purchase cost)

CLASS 800# (in mm)

Size	F/F	ØP	ØA	B(min)	ØWH	H(close)	H(open)	Weight(kg)
15 MM	110	9	21.8	9.5	86	104	127	1.9
20 MM	112	12	27.2	12.5	86	104	127	1.9
25 MM	126	17	33.9	12.5	116	141	175	4
40 MM	180	28	48.8	12.5	231	150	185	5.8

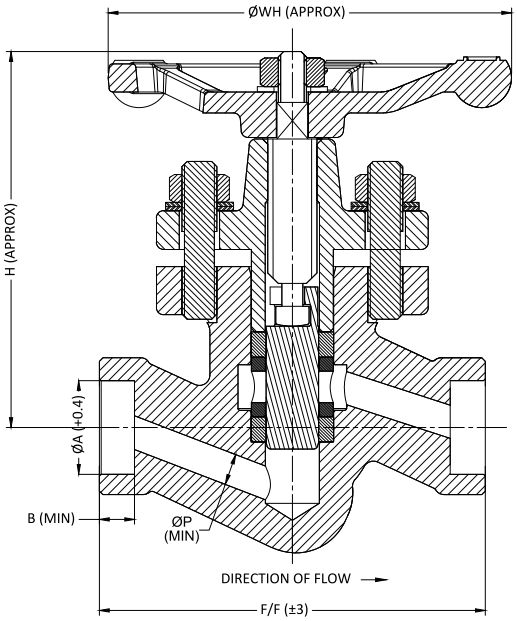

COMPARISON BETWEEN GLOBE VALVES AND PISTON VALVES

Parameter	Piston Valve	Traditional Globe Valve
Leakage Class	VI	VI
Valve Life	Very high compared to Globe Valve	Very low due to leakage through gland occur
Maintenance	Inline Maintenance	Valve needs to be removed from line
Gland Leakage	No gland, hence no leak	Frequent
Operation	Valve Operate without using spanner	Spanner Required for Operate valves
Sealing Area	Large	Small
Repair Cost	Very Low Wearing Parts are Sealing rings which are easily replaceable	High Seat dwarfish during isolation
Steam Leakage	Not Possible till the ring wear out	Very Common Due to friction between steam & gland
Steam Seal	Sealing Ring	Gland Packing
Equipment Down time	Low for replacing sealing ring	Very high for replacing gland packing

VALVE PARTS

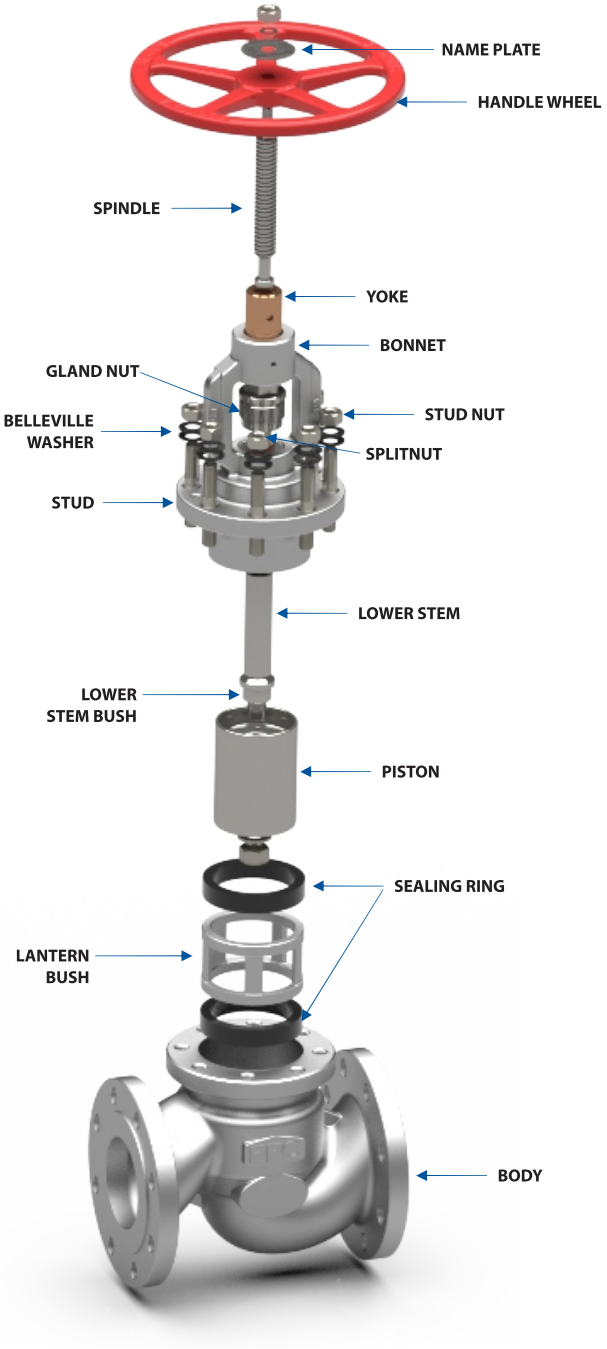

IMPORTANT INSTRUCTIONS :

INSTALLATION : The valve should be installed in the direction of flow indicated on the body. The valve can be installed in any plane, except with the handwheel on the lower side.

MAINTENANCE : In case any leakage is observed the bonnet nuts should be tightened with the valve in the fully closed position.Tightening the bonnet nuts may be repeated as and when required until the rings are worn out and no further adjustment ortightening is possible. At this stage the sealing rings need to be replaced. No undue force should be used when tightening the nuts,as they should rotate easily with a standard spanner. Care should be taken while tightening the nuts to avoid tilting of the bonnet. Undue force should not be used to shut the valve as this may damage the spindle or the wheel.

IMPORTANT : Always use the recommended tightening torque. Avoid excessive tightening, as this may reduce the life of the sealingrings. Care should be taken while removing the old sealing rings for replacement

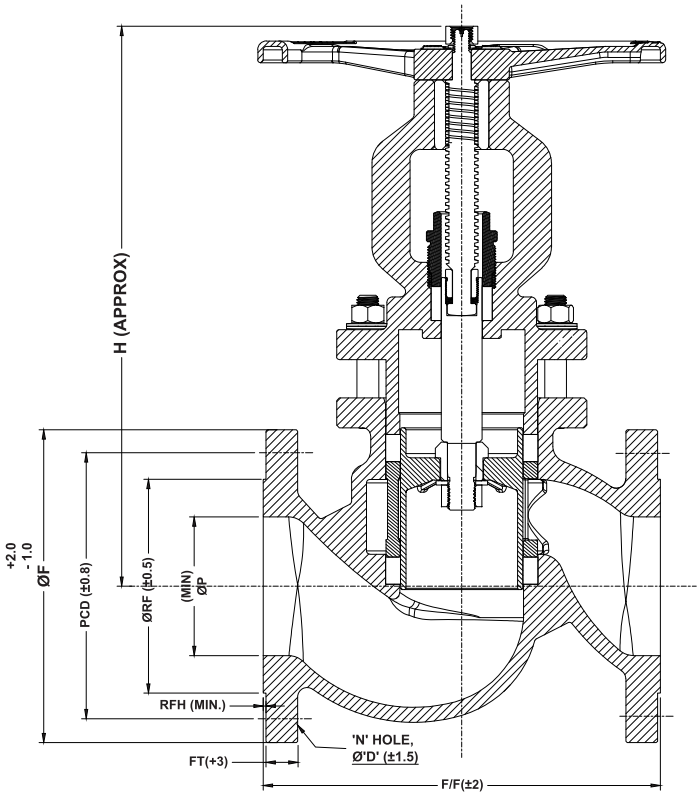

DIMENSIONS & WEIGHT CHART :

CLASS 150#

SIZE	F/F	ØP	ØRF	RFH	ØF	FT	PCD	N	ØD	H(CLOSE)	H(OPEN)	ØWH	WEIGHT(KG)
15 MM	108	12	34.9	1.5	90	8.0	60.3	4	15.9	104	127	86	2.3
20 MM	117	17	42.9	1.5	100	8.9	69.9	4	15.9	110	135	86	3.2
25 MM	127	25	50.8	1.5	110	12.9	79.4	4	15.9	142	176	116	4.3
32 MM	140	28	63.5	1.5	117	11.32	88.9	4	15.9	193	240	150	8.0
40 MM	165	40	73	1.5	125	12.7	98.4	4	15.9	193	240	150	9.6
50 MM	203	50	92.1	1.5	150	14.3	120.7	4	19.0	223	269	200	13.8
65 MM	216	65	104.8	1.5	180	15.7	139.7	4	19.0	252	315	250	20
80 MM	241	80	127	1.5	190	17.5	152.4	4	19.0	270	345	250	24.5
100 MM	292	100	157.2	1.5	230	22.3	190.5	8	19.0	330	412	300	47.5
125 MM	356	125	185.7	1.5	254	22.5	215.9	8	22.2	495	615	400	80
150 MM	406	152	215.9	1.5	280	23.9	251.3	8	22.2	495	615	400	88
200 MM	495	200	269.9	1.5	343	26.9	298.4	8	22.2	575	720	400	152

CLASS 300#

SIZE	F/F	ØP	ØRF	RFH	ØF	FT	PCD	N	ØD	H(CLOSE)	H(OPEN)	ØWH	WEIGHT(KG)
15 MM	152	12	34.9	1.5	95	12.5	66.7	4	15.9	104	127	86	2.9
20 MM	178	17	42.9	1.5	115	14.2	82.6	4	15.9	107	132	86	5.1
25 MM	203	25	50.8	1.5	125	15.9	88.9	4	19	142	176	116	6.8
32 MM	216	28	63.5	1.5	133	19.1	98.6	4	19	193	240	150	11
40 MM	229	40	73	1.5	155	19.1	114.3	4	22.2	193	240	150	13.7
50 MM	267	50	92.1	1.5	165	20.7	127	8	19.0	223	269	200	13.8
80 MM	318	80	127	1.5	210	27	168.3	8	22.2	270	345	250	32
100 MM	356	100	157.2	1.5	255	30.2	200	8	22.2	412	496	300	62
125 MM	400	125	185.7	1.5	279	33.3	235	8	22.2	195	615	400	95
150 MM	444	150	215.9	1.5	320	35.0	269.9	12	22.2	495	615	400	105
200 MM	559	200	269.7	1.5	381	39.6	330.0	12	25.4	575	750	400	185

TWO PIECE FLANGE END BALL VALVE

DESIGN FEATURE :

Design and Manufacturing : BS EN ISO 17292 (CLASS 150)
Inspection and Testing : ISO 5208 / API 598
Face to Face Standard : ASME B16.10
Closer Member : Solid / Hollow Ball
Flange Standard : ASME B16.5
Structure Feature : 2 Piece, Soft Seated, Investment Casting, Full Bore
Shell Materials : WCB, LCB, CF8, CF3, CF8M, CF3M, Duplex, Super Duplex, etc.
Special Features : Locking Arrangement, Mounting Pad, Antistatic,
Stem Extension, Fire safe, Pneumatic Operated, etc.

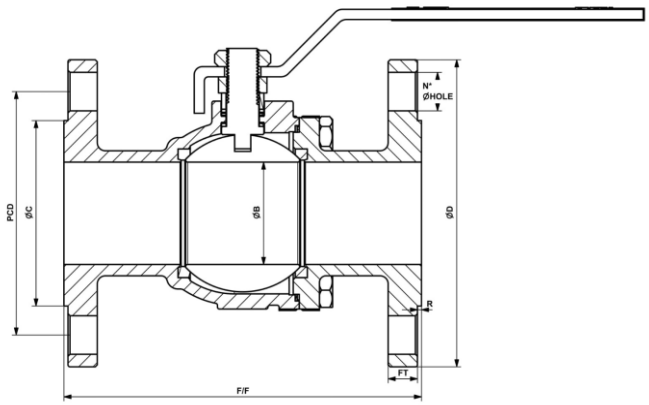

DIMENSION CHART

SIZE		F/F (±1.5)	ØB	FT (Min.)	ØD	ØC	R	FLANGE DRILLING		
MM	INCH							PCD	ØHOLE	N of H
15	1/2"	108	13	7.9	89	35.1	1.8	60.5	15.9	4
20	3/4"	117	19	8.6	99	42.9	1.8	69.8	15.9	4
25	1"	127	25	9.7	108	50.8	1.8	79.2	15.9	4
32	1 3/4"	140	32	11.2	117	63.5	1.8	88.9	15.9	4
40	11/2"	165	38	12.7	127	73	1.8	98.6	15.9	4
50	2"	178	50.5	14.2	152	91.9	1.8	120.6	19.1	4
65	2 1/2"	191	64	15.7	178	104.6	1.8	139.7	19.1	4
80	3"	203	76	17.5	190	127	1.8	152.4	19.1	4
100	4"	229	101	22.4	229	157.2	1.8	190.5	19.1	8
150	6"	267	151	23.9	279	215.9	1.8	241.3	22.22	8

THREE PIECE FLANGED END BALL VALVE

DESIGN FEATURE :
Design and Manufacturing : BS EN ISO 17292 (CLASS 150)
Inspection and Testing : ISO 5208 / API 598
Face to Face Standard : ASME B 16.10
Closer member : Solid / Hollow Ball
Flange Standard : ASME B16.5
Structure Feature : 3 Piece Soft Seated, Lever Operated, Investment Casting, Full Bore.
Shell Materials : WCB, LCB, CF8, CF3, CF8M, CF3M, Duplex, Super Duplex, etc.
Special Features : Locking Arrangement, Mounting Pad, Antistatic, Stem Extension, Fire safe, Pneumatic Operated.

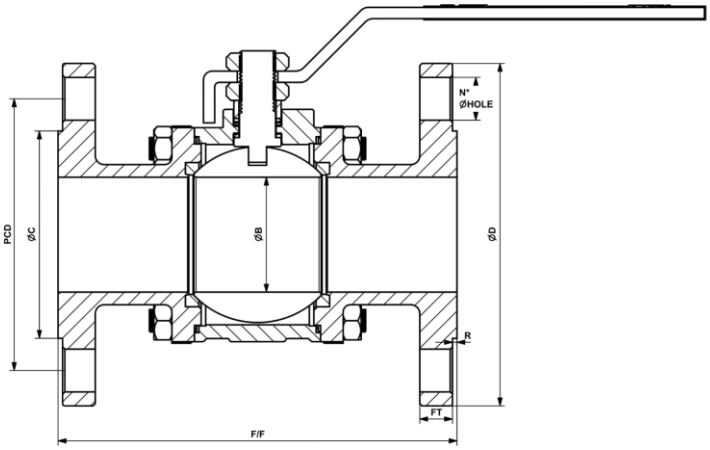

DIMENSION CHART

SIZE		F/F	ØB	FT	ØD	ØC	R	FLANGE DRILLING		
MM	INCH	(±1.5)		(Min.)				PCD	ØHOLE	N of H
15	1/2"	108	13	7.9	89	35.1	1.8	60.5	15.9	4
20	3/4"	117	19	8.6	99	42.9	1.8	69.8	15.9	4
25	1"	127	25	9.7	108	50.8	1.8	79.2	15.9	4
32	1 3/4"	140	32	11.2	117	63.5	1.8	88.9	15.9	4
40	11/2"	165	38	12.7	127	73	1.8	98.6	15.9	4
50	2"	178	50.5	14.2	152	91.9	1.8	120.6	19.1	4
65	2 1/2"	191	64	15.7	178	104.6	1.8	139.7	19.1	4
80	3"	203	76	17.5	190	127	1.8	152.4	19.1	4
100	4"	229	101	22.4	229	157.2	1.8	190.5	19.1	8
150	6"	267	151	23.9	279	215.9	1.8	241.3	22.22	8

THREE PIECE SCREWED END

DESIGN FEATURE :

Design and Manufacturing : BS EN ISO 17292-1 (CLASS 150)
Inspection and Testing : ISO 5208 / API 598
Face to Face Standard : As per Manufacturer's Standard
Screwed End Standard : ASME B1.20.1 (NPT/BSP/BSPT)
Socket weld End Standard : ASME B16.11
Closer member : Solid / Hollow Ball
Structure Feature : 3 Piece, Soft Seated, Lever Operated, Investment Casting, Full Bore
Shell Materials : WCB, LCB, CF8, CF3, CF8M, CF3M, Duplex, Super Duplex, etc.
Special Features : Locking Arrangement, Mounting Pad, Antistatic, Stem Extension, Fire safe, Pneumatic Operated, etc.

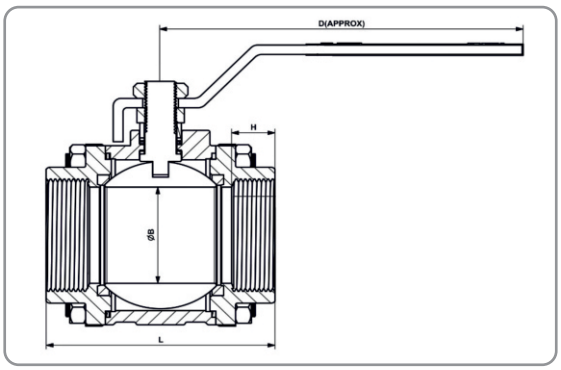

SIZE		L	ØB	D	H
MM	INCH	(±3)	(Min.)	(Approx)	(Min.)
15	1/2"	63	13	115	14
20	3/4"	72	19	115	15.5
25	1"	87	25	142	20
40	1 1/2"	114	38	170	18.25
50	2"	132	50.5	170	23
65	2 1/2"	142	64	240	25.5
80	3"	158	76	270	26

ONE PIECE SCREWED END

DESIGN FEATURE :

Design and Manufacturing : BS EN ISO 17292-1 (CLASS 150)
Inspection and Testing : ISO 5208 / API 598
Face to Face Standard : As per Manufacturer's Standard
Screwed End Standard : ASME B1.20.1 (NPT/BSP)
Closer member : Solid / Hollow Ball
Structure Feature : 1 Piece, Soft Seated, Lever Operated, Investment Casting, Full Bore
Shell Materials : WCB, LCB, CF8, CF3, CF8M, CF3M, Duplex, Super Duplex, etc.

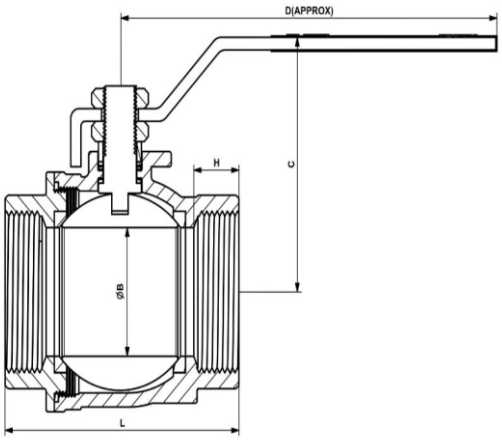

SIZE		L	ØB	C	D	H
MM	INCH	(±3)	(Min.)	(±3)	(Approx)	(Min.)
15	1/2"	58	13	47	115	13.5
20	3/4"	68	19	55	115	15
25	1"	76	25	70	142	16.5
40	1 1/2"	98	38	95	170	17.8
50	2"	116	50.5	105	170	21

FORGED STEEL THREE PIECE BALL VALVE

DESIGN FEATURE :

Design and Manufacturing : BS EN ISO 17292 (CLASS 600 & 800)
Inspection and Testing : BS EN 12266-1/ISO 5208-A/API 598
Face to Face Standard : As per Manufacturer's Standard
Screwed End Standard : ASME B1.20.1 (NPT/BSP/BSPT)
Socket weld End Standard : ASME B16.11
Butt weld End Standard : ASME B 16.25
Closer member : Solid Ball
Structure Feature : 3 Piece, Soft Seated, Lever Operated, Forged steel, Reduced Bore, Full Bore
Shell Materials : A105, F304/L, F316/L, F51, F55, F60, etc.
Special Features : Locking Arrangement, Antistatic, Stem Extension, Fire safe, Nipple Extension, Position Indicator, etc.

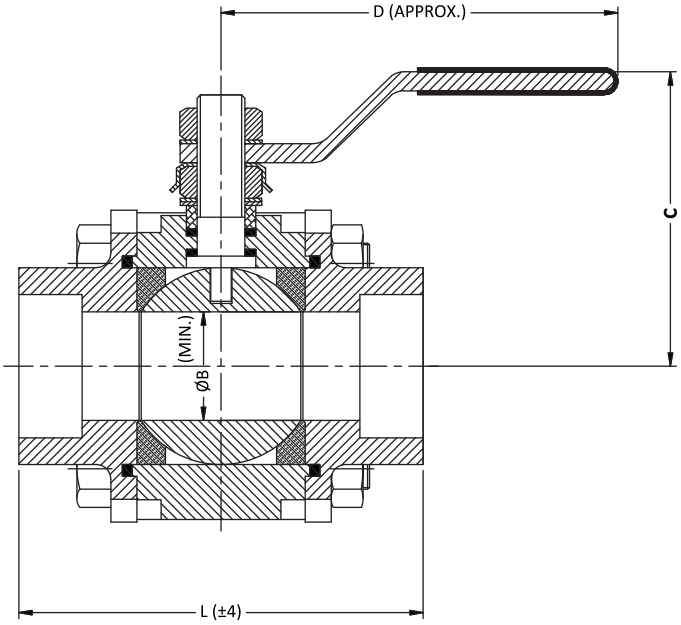

BALL VALVE SOCKET/SCREWED DIMENSION CHART

CLASS 600/800 REDUCED BORE						
SIZE		L	ØB	C	D	WT
MM	INCH	(±3)	(Min)			(KG)
15	1/2"	68	10	38	128	0.7
20	3/4"	73	14	40	128	1
25	1"	96	20	53	155	1.9
40	1 1/2"	116	30.5	75	200	3.3
50	2"	128	37.3	80	200	4.7

CLASS 600/800 FULL BORE						
SIZE		L	ØB	C	D	WT
MM	INCH	(±3)	(Min)			(KG)
15	1/2"	73	14	40	128	1
20	3/4"	96	20	53	155	1.9
25	1"	103	25	56	165	2.5
40	1 1/2"	128	37.3	80	200	4.7
50	2"	142	50	90	200	6.5

FORGED STEEL GATE VALVE

DESIGN FEATURE :
Design and Manufacturing : API 602 / BS EN ISO 15761
Inspection and Testing : API 598
Socket Weld Standard : ASME B 16.11
Screwed End Standard : ASME B1.20.1
Butt Weld Standard : ASME B 16.25
Flange Standard : ASME B16.5
Face To Face for General Valves : As per Manufacturer's Standard
Face To Face for Flanged Valves : ASME B 16.10
Material Standard : ASTM, A105, ASTM A182 GR.F304, F304L, F316, F316L, F51, F55, F60, etc.
Special Feature : Locking arrangement, Stem extension, Nipple Extension, etc.

DIMENSION CHART

CLASS 150# (Flange End)

SIZE	F/F	ØF	FT	ØA	WT(KG)
15MM	108	90	9.6	15.8	2.6
20MM	117	100	11.2	21	3.5
25MM	127	110	12.7	26.7	5.1
40MM	165	125	15.9	41	9.3
50MM	178	150	17.5	52.5	15.0

CLASS 300# (Flange End)

SIZE	F/F	ØF	FT	ØA	WT(KG)
15MM	140	95	12.7	15.8	3.2
20MM	152	115	14.3	21	4.7
25MM	165	125	15.9	26.7	6.5
40MM	190	155	19.1	41	12.1
50MM	216	165	20.7	52.5	17.2

CLASS 600# (Flange End)

SIZE	F/F	ØF	FT	ØA	WT(KG)
15MM	165	95	14.3	15.8	3.6
20MM	190	115	15.9	21	5.1
25MM	216	125	17.5	26.7	7.3
40MM	241	155	22.3	41	13.7
50MM	292	165	25.4	52.5	20

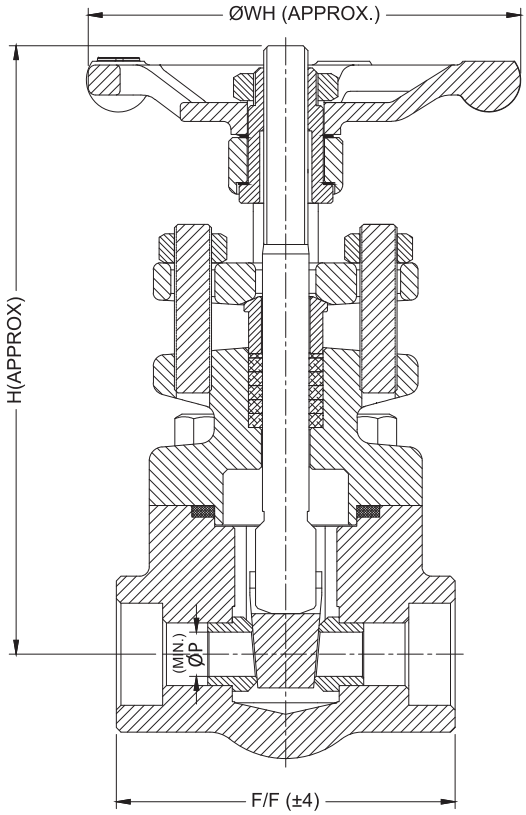

SOCKET / SCREWED END

CLASS 800#

SIZE	F/F	ØP	H(O)	H(C)	ØHW	WT(KG)
15MM	87	9	146	131	90	1.65
20MM	92	12	150	135	90	1.92
25MM	106	17	184	163	116	3.15
40MM	127	28	238	205	150	6.25
50MM	142	36	282	236	150	10.4

CLASS 1500#

SIZE	F/F	ØP	H(O)	H(C)	ØHW	WT(KG)
15MM	92	9	150	135	90	2.25
20MM	106	12	178	163	116	3.30
25MM	127	17	226	205	150	7.3
40MM	142	28	269	236	150	11
50MM	172	36	310	270	200	14.5

CLASS 2500#

SIZE	F/F	ØP	H(O)	H(C)	ØHW	WT(KG)
15MM	106	9	178	163	116	3.45
20MM	127	12	220	205	150	6.85
25MM	142	17	236	236	150	11.5
40MM	172	28	270	270	200	15.0
50MM	-	-	-	-	-	-

FORGED STEEL GLOBE VALVE

DESIGN FEATURE :
Design and Manufacturing : API 602 / BS EN ISO 15761
Inspection and Testing : API 598
Socket Weld Standard : ASME B 16.11
Screwed End Standard : ASME B1.20.1
Butt Weld Standard : ASME B 16.25
Flange Standard : ASME B16.5
Face To Face for General Valves : As per Manufacturer's Standard
Face To Face for Flanged Valves : ASME B 16.10
Special Feature : Locking arrangement, Stem extension, Nipple Extension, etc.

DIMENSION CHART

CLASS 150# (Flange End)

SIZE	F/F	ØF	FT	ØA	WT(KG)
15MM	108	90	9.6	15.8	2.60
20MM	117	100	11.2	21	3.50
25MM	127	110	12.7	26.7	5.00
40MM	165	125	15.9	41	9.50
50MM	203	150	17.5	52.5	15.30

CLASS 300# (Flange End)

SIZE	F/F	ØF	FT	ØA	WT(KG)
15MM	152	95	12.7	15.8	3.20
20MM	178	115	14.3	21	4.70
25MM	203	125	15.9	26.7	6.80
40MM	229	155	19.1	41	12.50
50MM	267	165	20.7	52.5	17.90

CLASS 600# (Flange End)

SIZE	F/F	ØF	FT	ØA	WT(KG)
15MM	165	95	14.3	15.8	3.60
20MM	190	115	15.9	21	5.10
25MM	216	125	17.5	26.7	7.20
40MM	241	155	22.3	41	13.50
50MM	292	165	25.4	52.5	19.90

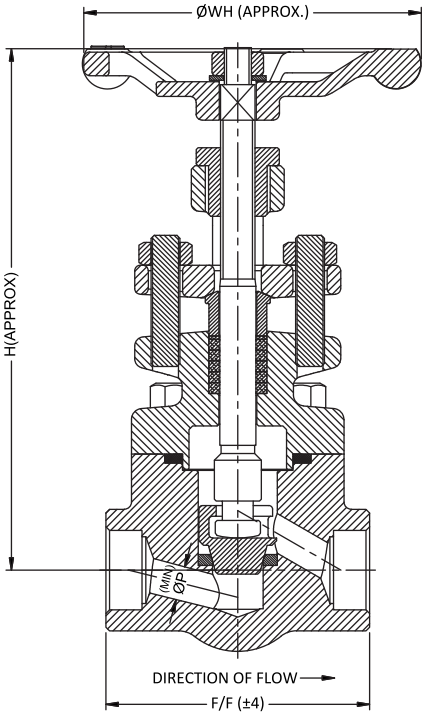

SOCKET / SCREWED END

CLASS 800#

SIZE	F/F	ØP	H(O)	H(C)	ØHW	WT(KG)
15MM	87	9	148	141	90	1.70
20MM	92	12	152	145	90	2.00
25MM	106	17	186	172	116	3.20
40MM	127	25	236	215	150	6.40
50MM	142	29	279	250	150	10.60

CLASS 1500#

SIZE	F/F	ØP	H(O)	H(C)	ØHW	WT(KG)
15MM	92	8	152	145	90	2.30
20MM	106	9	183	169	116	3.35
25MM	127	14	231	210	150	6.65
40MM	142	25	273	244	150	11.20
50MM	172	27	321	297	200	14.50

CLASS 2500#

SIZE	F/F	ØP	H(O)	H(C)	ØHW	WT(KG)
15MM	106	7	183	169	116	4.00
20MM	127	8	228	207	150	7.00
25MM	142	12	268	239	150	11.70
40MM	172	22	321	297	200	15.00
50MM	-	-	-	-	-	-

FORGED STEEL LIFT CHECK VALVE (NRV)

DESIGN FEATURE :
Design and Manufacturing : API 602 / BS EN ISO 15761
Inspection and Testing : API 598
Socket Weld Standard : ASME B 16.11
Screwed End Standard : ASME B1.20.1
Butt Weld Standard : ASME B 16.25
Flange Standard : ASME B16.5
Face To Face for General Valves : As per Manufacturer's Standard
Face To Face for Flanged Valves : ASME B 16.10
Special Feature : Nipple Extension

DIMENSION CHART

CLASS 150# (Flange End)

SIZE	F/F	ØF	FT	ØA	WT(KG)
15MM	108	90	9.6	15.8	2
20MM	117	100	11.2	21	2.9
25MM	127	110	12.7	26.7	4.2
40MM	165	125	15.9	41	7.9
50MM	203	150	17.5	52.5	13.4

CLASS 300# (Flange End)

SIZE	F/F	ØF	FT	ØA	WT(KG)
15MM	152	95	12.7	15.8	2.8
20MM	178	115	14.3	21	4
25MM	203	125	15.9	26.7	6
40MM	229	155	19.1	41	9.3
50MM	267	165	20.7	52.5	16

CLASS 600# (Flange End)

SIZE	F/F	ØF	FT	ØA	WT(KG)
15MM	165	95	14.3	15.8	3
20MM	190	115	15.9	21	4.2
25MM	216	125	17.5	26.7	6.4
40MM	241	155	22.3	41	11.9
50MM	292	165	25.4	52.5	18

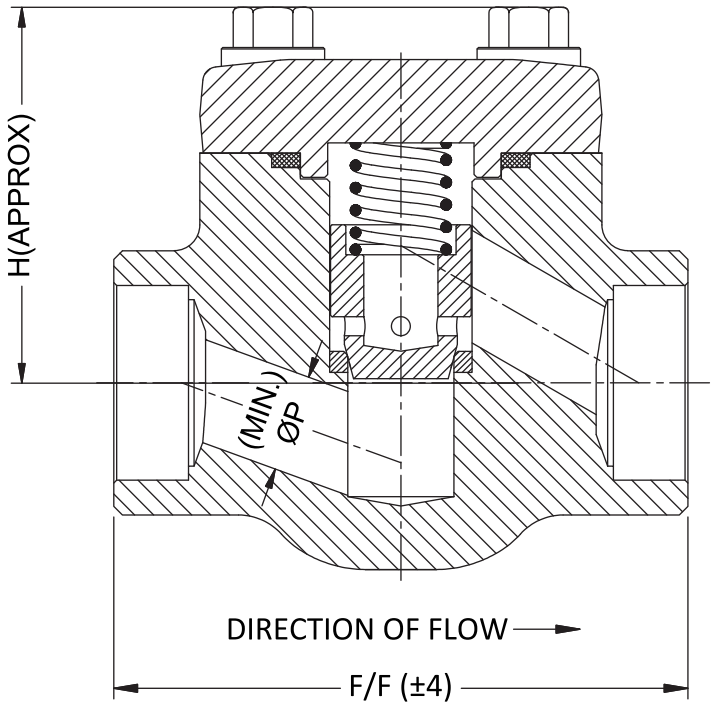

SOCKET / SCREWED END

CLASS 800#

SIZE	F/F	ØP	H	WT(KG)
15MM	87	9	53	1
20MM	92	12	56	1.3
25MM	106	17	66	2.2
40MM	127	25	86	4.7
50MM	142	29	104	8.2

CLASS 1500#

SIZE	F/F	ØP	H	WT(KG)
15MM	92	8	56	1.5
20MM	106	9	66	2.5
25MM	127	14	86	5.6
40MM	142	25	104	9.4
50MM	172	27	120	11

CLASS 2500#

SIZE	F/F	ØP	H	WT(KG)
15MM	106	7	66	2.9
20MM	127	8	86	6.4
25MM	142	12	104	10.8
40MM	172	22	120	11.5
50MM	-	-	-	-

CASTING/FORGING/BARSTOCK MATERIAL GRADES

DESCRIOTION	UNS GRADE	FORGING	CASTING	BARSTOCK
Carbon Steel	K30504	A105	A216 WBC	A105
Alloy Steel	K41545	A182 F5	A217 C5	A182 F5
	K11597	A182 F11	A217 WC6	A739 B11
	K21590	A182 F22	A217 WC9	A739 B22
	K90941	A182 F9	A217 WC6	A182 F9
Stainless Steel	S30400	A182 F304	A351 CF8	A276 or A479 304
	S30403	A182 F304L	A351 CF3	A276 or A479 304L
	S31600	A182 F316	A351 CF8M	A276 or A479 316
	S31603	A182 F316L	A351 CF3M	A276 or A479 316L
	S32100	A182 F321	-	A276 or A479 321
	S34700	A182 F347	A351 CF8C	A276 or A479 347
Duplex	S13803	A182 F51	A890 Gr. 4A	A276 or A479 S31803
Super Duplex	S32750 or 32760	A182 F53	A890 Gr. 6A	A276/A479 S32750 or 60

TEST PRESSURE CHART

VALVE RATING	SHELL HYDRO		SEAT CLOSURE HYDRO		BACKSEAT HYDRO		SEAT CLOSURE PNEUMATIC	
	Psi	Bar	Psi	Bar	Psi	Bar	Psi	Bar
PN 6	132	9	132	9.1	97	6.6	100	7.0
PN 10	219	15	219	15	161	11	100	7.0
PN 16	350	24	350	24	256	17.6	100	7.0
PN 20	437	30	437	30	320	22	100	7.0
PN 25	545	37.5	363	25	399	27.5	100	7.0
150	450	31.0	325	22.4	325	22.4	100	7.0
300	1125	77.6	825	56.9	825	56.9	100	7.0
600	2225	153.4	1650	133.8	1650	113.8	100	7.0
800	3000	206.8	2200	151.4	2200	151.7	100	7.0
900	3375	232.7	2475	170.6	2475	170.6	100	7.0
1500	5625	387.8	4125	284.4	4125	284.4	100	7.0
2500	9375	646.4	6875	473.9	6875	473.9	100	7.0

COEFFICIENT VALUE FOR BUTTERFLY VALVE

Valve Flow Coefficient (Cv) is the flow capability of a control valve at fully open conditions relative to the pressure drop across the valve. It is defined as the Volume of water (GPM in the US) at 60' F that will flow through a fully open valve with a pressure differential of 1 psi across the valve. It is useful to know how to calculate Cv because it is the standardized valve sizing and selection method for control valves used throughout the HVAC Industry.

The equation used to find CV is

$$Cv = \frac{Q^* \sqrt{G}}{\sqrt{\Delta P}} \qquad \Delta P = \left[\frac{Q^* \sqrt{G}}{Cv} \right]$$

Q = Flow in Gallons per Minute
G =Specific gravity of fluid (estimated as 1 for water systems)
ΔP =1

DN / NPS	VALVE OPENING POSITION				
	10°	**30°**	**50°**	**70°**	**90°**
40/1½"	1.2	21	35	92	177
50/2"	1.5	26	44	115	221
65/2"	1.3	34	57	150	287
80/3"	3.20	56	99	225	505
100/4"	5.1	48	144	434	870
125/5"	7.5	70	248	685	1422
150/6"	12	109	369	988	2106
200/8"	22	190	662	1810	3610
250/10"	33	290	990	2667	5631
300/12"	40	360	1306	3730	8106

100% On Site Production

BRASS & ALUMINIUM CAMLOCK FORGING PROCESS

Cutting

Forging

Deburring

Machining

Assembly

100% On Site Production

STAINLESS STEEL CAMLOCK INVESTMENT CASTING PROCESS

Wax pattem

Ceramic shell

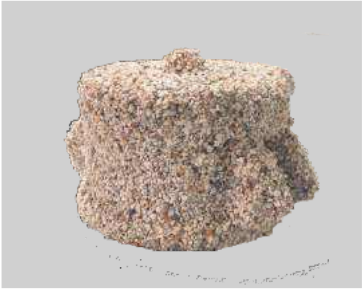

Cut o & Grinding

Shot blasting

Assembly

CAMLOCK COUPLINGS

BHT FORGE

Normative regulation:

MIL A-A-59326A

EN 14420−7

DIN 2828

Sizes:

DN15 Up To DN300

Materials:

Stainless Steel 316 (Investment Casting)

Brass (Forging)

Aluminium (Casting)

Polypropylen (injection)

Working Pressure:

18 bar / 250 psi (for SS and BR)

18 bar / 250 psi (for AL)

6 bar / 87 psi (for PP)

Thread type:

BSPP : EN ISO228-1 / DIN ISO 228-1

BSPT : EN 10226-1 / DIN 2999-1

NPT : ANSI B 1.20.1

Coupling Gaskets:

NBR (-30° C/+120° C)

EPDM (-45° C/+145° C)

FPM (-30° C/+200° C)

CSM (-30° C/+125° C)

Thread Gaskets:

PU (-50° C/+100° C)

PTFE(-25° C/+250° C)

Applications:

Chemicals

All industry

Tank Fuel Truck Equipement

SCOPE

This document details the design, materials and dimensions for cam locking couplings that serve as the link between hoses and connections to transport liquids, solids and gases, except liquid gas and steam. The couplings are capable of operating the pressure range 3 bar to 18 bar working pressure in a working temperature range of − 50 °C up to + 250 °C.

WARNING — Line pressure shall be reduced before disconnection.

	SS		BR		AL		PP	
	Bar	Psi	Bar	Psi	Bar	Psi	Bar	Psi
DN 15	16	225	16	225	16	225	6	87
DN 20	18	250	18	250	16	225	6	87
DN 25	18	250	18	250	18	250	6	87
DN 32	18	250	18	250	18	250	6	87
DN 40	18	250	18	250	18	250	6	87
DN 50	18	250	18	250	18	250	6	87
DN 65	16	225	16	225	16	225	6	87
DN 80	14	220	9	150	9	125	6	87
DN 100	7	100	7	100	7	100	6	87
DN 125	7	100	5	75	5	75	3	50
DN 150	7	100	5	75	5	75	3	50
DN 200	5	75	5	75	5	75	3	50

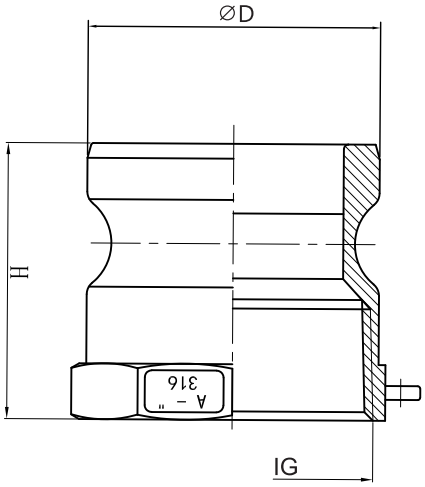

Type A

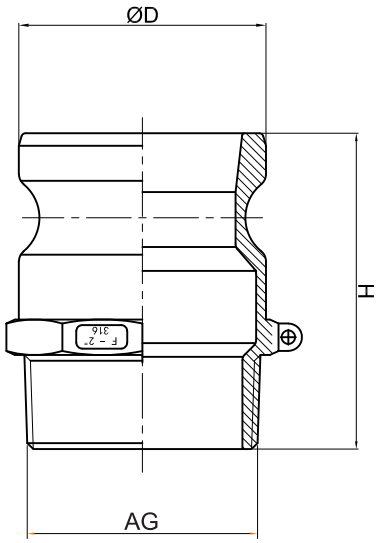

Type F

Name (A)	IG (Female Thread)	D (mm)	H (mm)
050	1/2″	24. 3	33. 4
075	3/4″	32. 1	35. 4
100	1″	36. 7	43. 5
125	11/4″	45. 5	50. 5
150	11/2″	53. 4	52
200	2″	63	59. 5
250	21/2″	75. 8	75
300	3″	91. 5	65
400	4″	119. 5	70
500	5″	145. 6	80
600	6″	176	83

Name (F)	AG (Male Thread)	D (mm)	H (mm)
050	1/2″	24.3	46.4
075	3/4″	32.1	48.4
100	1″	36.7	57
125	11/4″	45.5	67.5
150	11/2″	53.4	69
200	2″	63	80.5
250	21/2″	75.8	86
300	3″	91. 5	94
400	4″	119. 5	101
500	5″	145. 6	114
600	6″	176	122

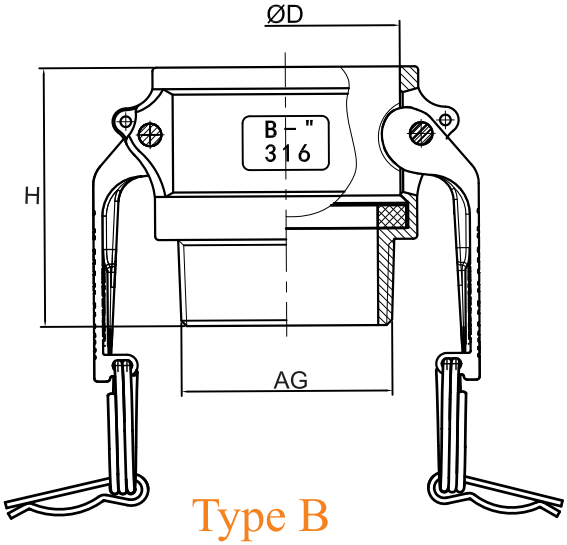

Type B

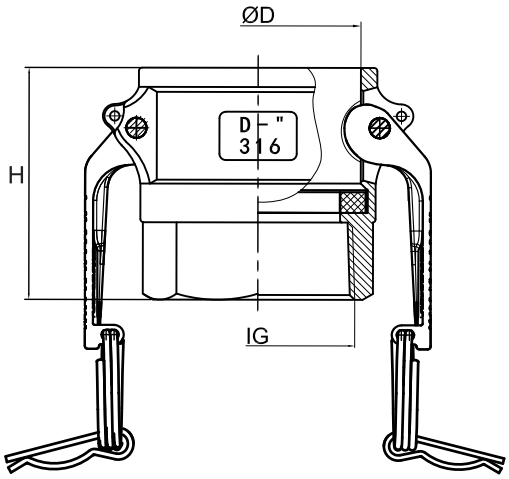

Type D

Name(B)	AG(Male Thread)	D(mm)	H(mm)
050	1/2″	24.8	43.5
075	3/4″	32.5	45
100	1″	37.3	54
125	11/4″	46	60.5
150	11/2″	54	62.5
200	2″	63.8	72
250	21/2″	76	75
300	3″	92.5	82
400	4″	120.3	86.5
500	5″	146.5	95.5
600	6″	176.5	107

Name(D)	IG(FemaleThread)	D(mm)	H(mm)
050	1/2″	24.8	43.5
075	3/4″	32.5	45
100	1″	37.3	54
125	11/4″	46	60.5
150	11/2″	54	62.5
200	2″	63.8	72
250	21/2″	76	75
300	3″	92.5	82
400	4″	120.3	86.5
500	5″	146.5	95.5
600	6″	176.5	104

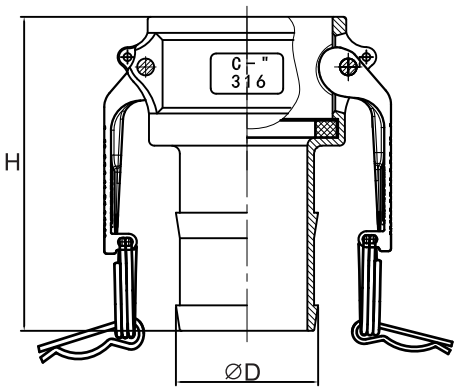

Type C

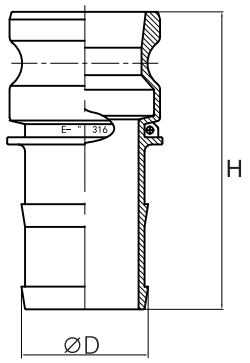

Type E

Name(C)	Size	D (mm)	H (mm)
050	1/2″	15	61
075	3/4″	21	78
100	1″	27.3	92.5
125	11/4″	34	96.5
150	11/2″	40.6	102
200	2″	53	117
250	21/2″	66.7	126
300	3″	78.8	146
400	4″	104.5	150.5
500	5″	130	172.5
600	6″	155.5	227

Name(E)	Size	D(mm)	H(mm)
050	1/2″	15	66.5
075	3/4″	21	80
100	1″	27.3	97.5
125	11/4″	34	102.5
150	11/2″	40.6	109
200	2″	53	124.5
250	21/2″	66.7	136.5
300	3″	78.8	154.5
400	4″	104.5	162
500	5″	130	180
600	6″	155.5	239

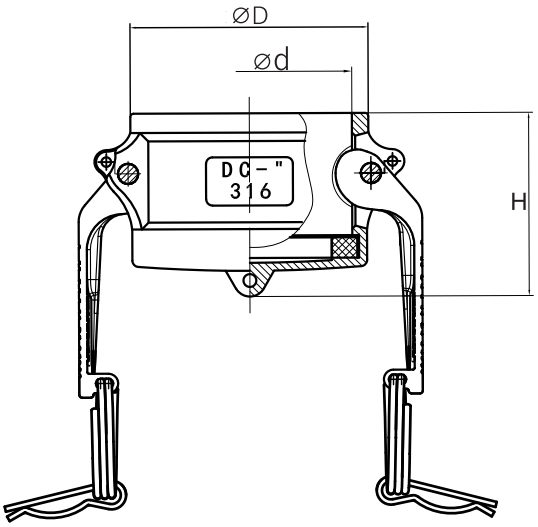

Type DC

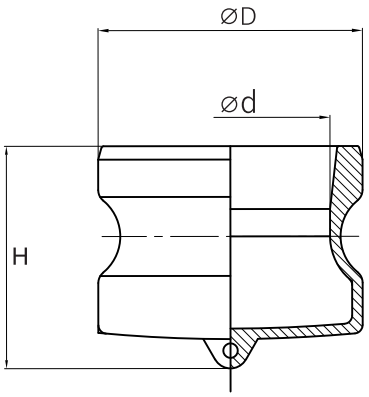

Typc DP

Name(DC)	Size	D (mm)	d (mm)	H(mm)
050	1/2″	33	24.8	35
075	3/4″	40	32.5	38.5
100	1″	46	37.3	44.5
125	11/4″	56	46	49.5
150	11/2″	64	54	52
200	2″	74	63.8	57
250	21/2″	87	76.5	59.5
300	3″	105	92.5	65
400	4″	134	120.3	66
500	5″	161	146.5	74
600	6″	194	176.5	80
800	8″	262	245	85

Name(DP)	Size	D (mm)	d (mm)	H (mm)
050	1/2″	24.3	14	30.9
075	3/4″	32.1	19	32
100	1″	36.7	24	40.5
125	11/4″	45.5	30.3	46
150	11/2″	53.4	38.5	48
200	2″	63	48	44.5
250	21/2″	75.8	59.6	58.5
300	3″	91.5	76	62
400	4″	119.5	100	65.5
500	5″	145.6	126	67.5
600	6″	176	152	80.5
800	8″	260	198	82.5

Camlock A (Female NPT Thread)

Name	Thread	Code	Weight(kg)	Gasket	Material
050	1/2″	B1021001	0.07	–	SS
075	3/4″	B1021004	0.11	–	SS
100	1″	B1021007	0.15	–	SS
125	11/4″	B1021010	0.24	–	SS
150	11/2″	B1021013	0.32	–	SS
200	2″	B1021016	0.42	–	SS
250	21/2″	B1021019	0.71	–	SS
300	3″	B1021022	0.73	–	SS
400	4″	B1021025	1.42	–	SS
500	5″	B1021028	1.92	–	SS
600	6″	B1021031	3.17	–	SS
800	8″	B1021045	2.31	–	SS
1000	10″	–	–	–	SS
1200	12″	–	–	–	SS

050	1/2″	B1041001	0.02	–	AL
075	3/4″	B1041004	0.04	–	AL
100	1″	B1041007	0.05	–	AL
125	11/4″	B1041010	0.09	–	AL
150	11/2″	B1041013	0.11	–	AL
200	2″	B1041016	0.15	–	AL
250	21/2″	B1041019	0.24	–	AL
300	3″	B1041022	0.27	–	AL
400	4″	B1041025	0.58	–	AL
500	5″	B1041028	0.90	–	AL
600	6″	B1041031	0.84	–	AL
800	8″	B1041045	2.31	–	AL
1000	10″	–	–	–	AL
1200	12″	–	–	–	AL

050	1/2″	B1061001	0.07	–	BR
075	3/4″	B1061004	0.10	–	BR
100	1″	B1061007	0.15	–	BR
125	11/4″	B1061010	0.20	–	BR
150	11/2″	B1061013	0.29	–	BR
200	2″	B1061016	0.35	–	BR
250	21/2″	B1061019	0.72	–	BR
300	3″	B1061022	0.73	–	BR
400	4″	B1061025	1.48	–	BR
500	5″	B1061028	1.79	–	BR
600	6″	B1061031	3.38	–	BR
800	8″	B1061045	7.36	–	BR
1000	10″	–	–	–	BR
1200	12″	–	–	–	BR

050	1/2″	B1071001	0.02	–	PP
075	3/4″	B1071004	0.02	–	PP
100	1″	B1071007	0.03	–	PP
125	11/4″	B1071010	0.05	–	PP
150	11/2″	B1071013	0.07	–	PP
200	2″	B1071016	0.09	–	PP
250	21/2″	B1071019	0.11	–	PP
300	3″	B1071022	0.21	–	PP
400	4″	B1071025	0.36	–	PP

Camlock A (Female BSP Thread)

Name	Thread	Code	Weight(kg)	Gasket	Material
050	1/2″	B1021002	0.07	–	SS
075	3/4″	B1021005	0.11	–	SS
100	1″	B1021008	0.15	–	SS
125	11/4″	B1021011	0.24	–	SS
150	11/2″	B1021014	0.32	–	SS
200	2″	B1021017	0.42	–	SS
250	21/2″	B1021020	0.71	–	SS
300	3″	B1021023	0.73	–	SS
400	4″	B1021026	1.42	–	SS
500	5″	B1021029	1.92	–	SS
600	6″	B1021032	3.17	–	SS
800	8″	B1021046	2.31	–	SS
1000	10″	–	–	–	SS
1200	12″	–	–	–	SS

050	1/2″	B1041002	0.02	–	AL
075	3/4″	B1041005	0.04	–	AL
100	1″	B1041008	0.05	–	AL
125	11/4″	B1041011	0.09	–	AL
150	11/2″	B1041014	0.11	–	AL
200	2″	B1041017	0.15	–	AL
250	21/2″	B1041020	0.24	–	AL
300	3″	B1041023	0.27	–	AL
400	4″	B1041026	0.58	–	AL
500	5″	B1041029	0.90	–	AL
600	6″	B1041032	0.84	–	AL
800	8″	–	2.31	–	AL
1000	10″	–	–	–	AL
1200	12″	–	–	–	AL

050	1/2″	B1061002	0.07	–	BR
075	3/4″	B1061005	0.10	–	BR
100	1″	B1061008	0.15	–	BR
125	11/4″	B1061011	0.20	–	BR
150	11/2″	B1061014	0.29	–	BR
200	2″	B1061017	0.35	–	BR
250	21/2″	B1061020	0.72	–	BR
300	3″	B1061023	0.73	–	BR
400	4″	B1061026	1.48	–	BR
500	5″	B1061029	1.79	–	BR
600	6″	B1061032	3.38	–	BR
800	8″	–	7.36	–	BR
1000	10″	–	–	–	BR
1200	12″	–	–	–	BR

050	1/2″	B1071002	0.01	–	PP
075	3/4″	B1071005	0.02	–	PP
100	1″	B1071008	0.03	–	PP
125	11/4″	B1071011	0.05	–	PP
150	11/2″	B1071014	0.06	–	PP
200	2″	B1071017	0.09	–	PP
250	21/2″	B1071020	0.14	–	PP
300	3″	B1071023	0.18	–	PP
400	4″	B1071026	0.36	–	PP

Camlock A (Female BSPP Thread/Gasket)

Name	Thread	Code	Weight (kg)	Gasket	Material
050	1/2″	B1021003	0.07	PTFE	SS
075	3/4″	B1021006	0.11	PTFE	SS
100	1″	B1021009	0.15	PTFE	SS
125	11/4″	B1021012	0.24	PTFE	SS
150	11/2″	B1021015	0.32	PTFE	SS
200	2″	B1021018	0.42	PTFE	SS
250	21/2″	B1021021	0.71	PTFE	SS
300	3″	B1021024	0.73	PTFE	SS
400	4″	B1021027	1.42	PTFE	SS
500	5″	B1021029	1.92	PTFE	SS
600	6″	B1021032	3.17	PTFE	SS
800	8″	B1021046	2.31	PTFE	SS
1000	10″	–	–	PTFE	SS
1200	12″	–	–	PTFE	SS

050	1/2″	B1041003	0.02	NBR	AL
075	3/4″	B1041006	0.04	NBR	AL
100	1″	B1041009	0.05	NBR	AL
125	11/4″	B1041012	0.09	NBR	AL
150	11/2″	B1041015	0.11	NBR	AL
200	2″	B1041018	0.15	NBR	AL
250	21/2″	B1041021	0.24	NBR	AL
300	3″	B1041046	0.27	NBR	AL
400	4″	B1041027	0.58	NBR	AL
500	5″	B1041030	0.90	NBR	AL
600	6″	B1041032	0.84	NBR	AL
800	8″	–	2.31	NBR	AL
1000	10″	–	–	NBR	AL
1200	12″	–	–	NBR	AL

050	1/2″	B1061003	0.07	NBR	BR
075	3/4″	B1061006	0.10	NBR	BR
100	1″	B1061009	0.15	NBR	BR
125	11/4″	B1061012	0.20	NBR	BR
150	11/2″	B1061015	0.29	NBR	BR
200	2″	B1061018	0.35	NBR	BR
250	21/2″	B1061021	0.72	NBR	BR
300	3″	B1061024	0.73	NBR	BR
400	4″	B1061027	1.48	NBR	BR
500	5″	B1061029	1.79	NBR	BR
600	6″	B1061032	3.38	NBR	BR
800	8″	–	7.36	NBR	BR
1000	10″	–	–	NBR	BR
1200	12″	–	–	NBR	BR

Camlock B (Male NPT Thread/Gasket)

Name	Thread	Code	Weight(kg)	Gasket	Material
050	1/2″	B 1022001	0.12	NBR	SS
075	3/4″	B 1022004	0.20	NBR	SS
100	1″	B 1022007	0.29	NBR	SS
125	11/4″	B 1022010	0.47	NBR	SS
150	11/2″	B 1022013	0.54	NBR	SS
200	2″	B 1022016	0.67	NBR	SS
250	21/2″	B 1022019	1.14	NBR	SS
300	3″	B 1022022	1.36	NBR	SS
400	4″	B 1022025	1.97	NBR	SS
500	5″	B 1022028	2.98	NBR	SS
600	6″	B 1022031	4.11	NBR	SS
800	8″	B 1022034	2.60	NBR	SS
1000	10″	–	–	NBR	SS
1200	12″	–	–	NBR	SS

050	1/2″	B 1042001	0.07	NBR	AL
075	3/4″	B 1042004	0.10	NBR	AL
100	1″	B 1042007	0.16	NBR	AL
125	11/4″	B 1042010	0.27	NBR	AL
150	11/2″	B 1042013	0.30	NBR	AL
200	2″	B 1042016	0.35	NBR	AL
250	21/2″	B 1042019	0.43	NBR	AL
300	3″	B 1042022	0.68	NBR	AL
400	4″	B 1042025	0.92	NBR	AL
500	5″	B 1042028	1.81	NBR	AL
600	6″	B 1042031	1.78	NBR	AL
800	8″	B 1042034	2.31	NBR	AL
1000	10″	–	–	NBR	AL
1200	12″	–	–	NBR	AL

050	1/2″	B 1062001	0.17	NBR	BR
075	3/4″	B 1062004	0.21	NBR	BR
100	1″	B 1062007	0.32	NBR	BR
125	11/4″	B 1062010	0.45	NBR	BR
150	11/2″	B 1062013	0.52	NBR	BR
200	2″	B 1062016	0.64	NBR	BR
250	21/2″	B 1062019	0.94	NBR	BR
300	3″	B 1062022	1.38	NBR	BR
400	4″	B 1062025	1.94	NBR	BR
500	5″	B 1062028	3.98	NBR	BR
600	6″	B 1062031	3.65	NBR	BR
800	8″	–	–	NBR	BR
1000	10″	–	–	NBR	BR
1200	12″	–	–	NBR	BR

050	1/2″	B 1072001	0.07	NBR	PP
075	3/4″	B 1072004	0.08	NBR	PP
100	1″	B 1072007	0.11	NBR	PP
125	11/4″	B 1072010	0.21	NBR	PP
150	11/2″	B 1072013	0.21	NBR	PP
200	2″	B 1072016	0.25	NBR	PP
250	21/2″	B 1072019	0.30	NBR	PP
300	3″	B 1072022	0.50	NBR	PP
400	4″	B 1072025	0.76	NBR	PP

Camlock B (Male BSPT Thread/Gasket)

Name	Thread	Code	Weight (kg)	Gasket	Material
050	1/2″	B 1022002	0.12	NBR	SS
075	3/4″	B 1022005	0.20	NBR	SS
100	1″	B 1022008	0.29	NBR	SS
125	11/4″	B 1022011	0.47	NBR	SS
150	11/2″	B 1022014	0.54	NBR	SS
200	2″	B 1022017	0.67	NBR	SS
250	21/2″	B 1022020	1.14	NBR	SS
300	3″	B 1022023	1.36	NBR	SS
400	4″	B 1022026	1.97	NBR	SS
500	5″	B 1022029	2.98	NBR	SS
600	6″	B 1022032	4.11	NBR	SS
800	8″	B 1022035	2.60	NBR	SS
1000	10″	–	–	NBR	SS
1200	12″	–	–	NBR	SS
050	1/2″	B 1042002	0.07	NBR	AL
075	3/4″	B 1042005	0.10	NBR	AL
100	1″	B 1042008	0.16	NBR	AL
125	11/4″	B 1042011	0.27	NBR	AL
150	11/2″	B 1042014	0.30	NBR	AL
200	2″	B 1042017	0.35	NBR	AL
250	21/2″	B 1042020	0.43	NBR	AL
300	3″	B 1042023	0.68	NBR	AL
400	4″	B 1042026	0.92	NBR	AL
500	5″	B 1042029	1.81	NBR	AL
600	6″	B 1042032	1.78	NBR	AL
800	8″	–	2.31	NBR	AL
1000	10″	–	–	NBR	AL
1200	12″	–	–	NBR	AL
050	1/2″	B 1062002	0.17	NBR	BR
075	3/4″	B 1062005	0.21	NBR	BR
100	1″	B 1062008	0.32	NBR	BR
125	11/4″	B 1062011	0.45	NBR	BR
150	11/2″	B 1062014	0.52	NBR	BR
200	2″	B 1062017	0.64	NBR	BR
250	21/2″	B 1062020	0.94	NBR	BR
300	3″	B 1062023	1.38	NBR	BR
400	4″	B 1062026	1.94	NBR	BR
500	5″	B 1062029	3.98	NBR	BR
600	6″	B 1062032	3.65	NBR	BR
800	8″	–	–	NBR	BR
1000	10″	–	–	NBR	BR
1200	12″	–	–	NBR	BR
050	1/2″	B 1072002	0.07	NBR	PP
075	3/4″	B 1072005	0.08	NBR	PP
100	1″	B 1072008	0.11	NBR	PP
125	11/4″	B 1072011	0.21	NBR	PP
150	11/2″	B 1072014	0.21	NBR	PP
200	2″	B 1072017	0.25	NBR	PP
250	21/2″	B 1072020	0.30	NBR	PP
300	3″	B 1072023	0.50	NBR	PP
400	4″	B 1072026	0.76	NBR	PP

Camlock C (Gasket)

Name	Size	Code	Weight (kg)	Gasket	Material
050	1/2″	B1023001	0.12	NBR	SS
075	3/4″	B1023002	0.20	NBR	SS
100	1″	B1023003	0.29	NBR	SS
125	11/4″	B1023004	0.47	NBR	SS
150	11/2″	B1023005	0.54	NBR	SS
200	2″	B1023006	0.67	NBR	SS
250	21/2″	B1023007	1.14	NBR	SS
300	3″	B1023008	1.35	NBR	SS
400	4″	B1023009	1.97	NBR	SS
500	5″	B1023010	2.98	NBR	SS
600	6″	B1023011	4.11	NBR	SS
800	8″	B1023023	2.60	NBR	SS
1000	10″	–	–	NBR	SS
1200	12″	–	–	NBR	SS

050	1/2″	B1043001	0.07	NBR	AL
075	3/4″	B1043002	0.10	NBR	AL
100	1″	B1043003	0.16	NBR	AL
125	11/4″	B1043004	0.27	NBR	AL
150	11/2″	B1043005	0.30	NBR	AL
200	2″	B1043006	0.35	NBR	AL
250	21/2″	B1043007	0.43	NBR	AL
300	3″	B1043008	0.68	NBR	AL
400	4″	B1043009	0.92	NBR	AL
500	5″	B1043010	1.81	NBR	AL
600	6″	B1043011	1.78	NBR	AL
800	8″	B1043023	4.75	NBR	AL
1000	10″	–	–	NBR	AL
1200	12″	–	–	NBR	AL

050	1/2″	B1063001	0.15	NBR	BR
075	3/4″	B1063002	0.23	NBR	BR
100	1″	B1063003	0.36	NBR	BR
125	11/4″	B1063004	0.49	NBR	BR
150	11/2″	B1063005	0.62	NBR	BR
200	2″	B1063006	0.77	NBR	BR
250	21/2″	B1063007	1.07	NBR	BR
300	3″	B1063008	1.58	NBR	BR
400	4″	B1063009	4.13	NBR	BR
500	5″	B1063010	3.32	NBR	BR
600	6″	B1063011	6.05	NBR	BR
800	8″	–	–	NBR	BR
1000	10″	–	–	NBR	BR
1200	12″	–	–	NBR	BR

050	1/2″	B1073001	0.07	NBR	PP
075	3/4″	B1073002	0.08	NBR	PP
100	1″	B1073003	0.12	NBR	PP
125	11/4″	B1073004	0.23	NBR	PP
150	11/2″	B1073005	0.23	NBR	PP
200	2″	B1073006	0.31	NBR	PP
250	21/2″	B1073007	0.51	NBR	PP
300	3″	B1073008	0.64	NBR	PP
400	4″	B1073009	0.91	NBR	PP

Type C - Serrated hose shank

Name	Size	Code	Weight (kg)	Gasket	Material
050	1/2″	B1023199	0.12	NBR	SS
075	3/4″	B1023202	0.20	NBR	SS
100	1″	B1023005	0.29	NBR	SS
125	11/4″	B1023208	0.47	NBR	SS
150	11/2″	B1023211	0.54	NBR	SS
200	2″	B1023213	0.67	NBR	SS
250	21/2″	B1023216	1.14	NBR	SS
300	3″	B1023219	1.35	NBR	SS
400	4″	B1023222	1.97	NBR	SS
500	5″	B1023225	2.98	NBR	SS
600	6″	B1023228	4.11	NBR	SS
800	8″	B1023231	2.60	NBR	SS
1000	10″	–	–	NBR	SS
1200	12″	–	–	NBR	SS
050	1/2″	B1043128	0.07	NBR	AL
075	3/4″	B1043130	0.10	NBR	AL
100	1″	B1043132	0.16	NBR	AL
125	11/4″	B1043134	0.27	NBR	AL
150	11/2″	B1043136	0.30	NBR	AL
200	2″	B1043138	0.35	NBR	AL
250	21/2″	B1043140	0.43	NBR	AL
300	3″	B1043142	0.68	NBR	AL
400	4″	B1043144	0.92	NBR	AL
500	5″	B1043146	1.81	NBR	AL
600	6″	B1043148	1.78	NBR	AL
800	8″	B1043150	4.75	NBR	AL
1000	10″	–	–	NBR	AL
1200	12″	–	–	NBR	AL
050	1/2″	B1063068	0.15	NBR	BR
075	3/4″	B1063071	0.23	NBR	BR
100	1″	B1063074	0.36	NBR	BR
125	11/4″	B1063077	0.49	NBR	BR
150	11/2″	B1063080	0.62	NBR	BR
200	2″	B1063083	0.77	NBR	BR
250	21/2″	B1063086	1.07	NBR	BR
300	3″	B1063089	1.58	NBR	BR
400	4″	B1063092	4.13	NBR	BR
500	5″	B1063098	3.32	NBR	BR
600	6″	B1063101	6.05	NBR	BR
800	8″	–	–	NBR	BR
1000	10″	–	–	NBR	BR
1200	12″	–	–	NBR	BR
050	1/2″	B1073012	0.01	NBR	PP
075	3/4″	B1073013	0.08	NBR	PP
100	1″	B1073014	0.12	NBR	PP
125	11/4″	B1073015	0.23	NBR	PP
150	11/2″	B1076016	0.23	NBR	PP
200	2″	B1073017	0.31	NBR	PP
250	21/2″	B1073018	0.51	NBR	PP
300	3″	B1073019	0.64	NBR	PP
400	4″	B1073020	0.91	NBR	PP

✻ the serrated suitable to safety clamps and crimping ferrules (only for SS,BR,AL)

Type C - Smooth shank EN 14420 - 7 (16 bars)

Name	Size	Code	Weight (kg)	Gasket	Material
050	1/2″	B 1023012	0.12	NBR	SS
075	3/4″	B 1023013	0.24	NBR	SS
100	1″	B 1023014	0.35	NBR	SS
125	11/4″	B 1023015	0.59	NBR	SS
150	11/2″	B 1023016	0.68	NBR	SS
200	2″	B 1023017	0.90	NBR	SS
250	21/2″	B 1023018	1.24	NBR	SS
300	3″	B 1023019	1.57	NBR	SS
400	4″	B 1023020	2.59	NBR	SS

✻ Suitable for safety clamps and crimping ferrules.

050	1/2″	B 1063023	0.15	NBR	BR
075	3/4″	B 1063024	0.25	NBR	BR
100	1″	B 1063025	0.38	NBR	BR
125	11/4″	B 1063026	0.63	NBR	BR
150	11/2″	B 1063027	0.69	NBR	BR
200	2″	B 1063028	0.91	NBR	BR
250	21/2″	B 1063029	1.18	NBR	BR
300	3″	B 1063030	1.57	NBR	BR
400	4″	B 1063031	2.71	NBR	BR

✻ Suitable for safety clamps and crimping ferrules.

Camlock D (Female NPT Thread/Gasket)

Name	Thread	Code	Weight(kg)	Gasket	Material
050	1/2″	B 1024001	0.13	NBR	SS
075	3/4″	B 1024004	0.23	NBR	SS
100	1″	B 1024007	0.31	NBR	SS
125	11/4″	B 1024010	0.49	NBR	SS
150	11/2″	B 1024013	0.55	NBR	SS
200	2″	B 1024016	0.71	NBR	SS
250	21/2″	B 1024019	1.01	NBR	SS
300	3″	B 1024022	1.31	NBR	SS
400	4″	B 1024025	2.14	NBR	SS
500	5″	B 1024028	3.54	NBR	SS
600	6″	B 1024031	4.61	NBR	SS
800	8″	–	–	NBR	SS
1000	10″	–	–	NBR	SS
1200	12″	–	–	NBR	SS

050	1/2″	B 1044001	0.06	NBR	AL
075	3/4″	B 1044004	0.12	NBR	AL
100	1″	B 1044007	0.16	NBR	AL
125	11/4″	B 1044010	0.28	NBR	AL
150	11/2″	B 1044013	0.32	NBR	AL
200	2″	B 1044016	0.36	NBR	AL
250	21/2″	B 1044019	0.47	NBR	AL
300	3″	B 1044022	0.73	NBR	AL
400	4″	B 1044025	1.21	NBR	AL
500	5″	B 1044028	1.41	NBR	AL
600	6″	B 1044031	2.16	NBR	AL
800	8″	B 1044035	2.61	NBR	AL
1000	10″	–	–	NBR	AL
1200	12″	–	–	NBR	AL

050	1/2″	B 1064001	0.16	NBR	BR
075	3/4″	B 1064004	0.22	NBR	BR
100	1″	B 1064007	0.32	NBR	BR
125	11/4″	B 1064010	0.46	NBR	BR
150	11/2″	B 1064013	0.54	NBR	BR
200	2″	B 1064016	0.67	NBR	BR
250	21/2″	B 1064019	0.94	NBR	BR
300	3″	B 1064022	1.40	NBR	BR
400	4″	B 1064025	2.09	NBR	BR
500	5″	B 1064028	2.58	NBR	BR
600	6″	B 1064031	5.02	NBR	BR
800	8″	–	–	NBR	BR
1000	10″	–	–	NBR	BR
1200	12″	–	–	NBR	BR

050	1/2″	B 1074001	0.07	NBR	PP
075	3/4″	B 1074004	0.08	NBR	PP
100	1″	B 1074007	0.13	NBR	PP
125	11/4″	B 1074010	0.21	NBR	PP
150	11/2″	B 1074013	0.23	NBR	PP
200	2″	B 1074016	0.27	NBR	PP
250	21/2″	B 1074019	0.44	NBR	PP
300	3″	B 1074022	0.50	NBR	PP
400	4″	B 1074025	0.75	NBR	PP

Camlock D (Female BSP Thread/Gasket)

Name	Thread	Code	Weight(kg)	Gasket	Material
050	1/2″	B1024002	0.13	NBR	SS
075	3/4″	B1024005	0.23	NBR	SS
100	1″	B1024008	0.31	NBR	SS
125	11/4″	B1024011	0.49	NBR	SS
150	11/2″	B1024014	0.55	NBR	SS
200	2″	B1024017	0.71	NBR	SS
250	21/2″	B1024020	1.01	NBR	SS
300	3″	B1024023	1.31	NBR	SS
400	4″	B1024026	2.14	NBR	SS
500	5″	B1024029	3.54	NBR	SS
600	6″	B1024032	4.61	NBR	SS
800	8″	B1024046	–	NBR	SS
1000	10″	–	–	NBR	SS
1200	12″	–	–	NBR	SS

050	1/2″	B1044002	0.06	NBR	AL
075	3/4″	B1044005	0.12	NBR	AL
100	1″	B1044008	0.16	NBR	AL
125	11/4″	B1044011	0.28	NBR	AL
150	11/2″	B1044014	0.32	NBR	AL
200	2″	B1044017	0.36	NBR	AL
250	21/2″	B1044020	0.47	NBR	AL
300	3″	B1044023	0.73	NBR	AL
400	4″	B1044026	1.21	NBR	AL
500	5″	B1044029	1.41	NBR	AL
600	6″	B1044032	2.16	NBR	AL
800	8″	–	2.61	NBR	AL
1000	10″	–	–	NBR	AL
1200	12″	–	–	NBR	AL

050	1/2″	B1064002	0.16	NBR	BR
075	3/4″	B1064005	0.22	NBR	BR
100	1″	B1064008	0.32	NBR	BR
125	11/4″	B1064011	0.46	NBR	BR
150	11/2″	B1064014	0.54	NBR	BR
200	2″	B1064017	0.67	NBR	BR
250	21/2″	B1064020	0.94	NBR	BR
300	3″	B1064023	1.40	NBR	BR
400	4″	B1064026	2.09	NBR	BR
500	5″	B1064023	2.58	NBR	BR
600	6″	B1064032	5.02	NBR	BR
800	8″	–	–	NBR	BR
1000	10″	–	–	NBR	BR
1200	12″	–	–	NBR	BR

050	1/2″	B1074002	0.07	NBR	PP
075	3/4″	B1074005	0.08	NBR	PP
100	1″	B1074008	0.13	NBR	PP
125	11/4″	B1074011	0.21	NBR	PP
150	11/2″	B1074014	0.23	NBR	PP
200	2″	B1074017	0.27	NBR	PP
250	21/2″	B1074020	0.44	NBR	PP
300	3″	B1074023	0.50	NBR	PP
400	4″	B1074026	0.75	NBR	PP

Camlock D (Female BSPP Thread/Gasket)

Name	Thread	Code	Weight(kg)	Threadgasket	Gasket	Material
050	1/2″	B1024290	0.13	PTFE	NBR	SS
075	3/4″	B1024293	0.23	PTFE	NBR	SS
100	1″	B1024297	0.31	PTFE	NBR	SS
125	11/4″	B1024301	0.49	PTFE	NBR	SS
150	11/2″	B1024304	0.55	PTFE	NBR	SS
200	2″	B1024308	0.71	PTFE	NBR	SS
250	21/2″	B1024312	1.01	PTFE	NBR	SS
300	3″	B1024316	1.31	PTFE	NBR	SS
400	4″	B1024320	2.14	PTFE	NBR	SS
500	5″	B1024323	3.54	PTFE	NBR	SS
600	6″	B1024327	4.61	PTFE	NBR	SS
800	8″	B1024331	–	PTFE	NBR	SS
1000	10″	–	–	PTFE	NBR	SS
1200	12″	–	–	PTFE	NBR	SS

050	1/2″	B1044101	0.06	NBR	NBR	AL
075	3/4″	B1044105	0.12	NBR	NBR	AL
100	1″	B1044109	0.16	NBR	NBR	AL
125	11/4″	B1044113	0.28	NBR	NBR	AL
150	11/2″	B1044117	0.32	NBR	NBR	AL
200	2″	B1044121	0.36	NBR	NBR	AL
250	21/2″	B1044125	0.47	NBR	NBR	AL
300	3″	B1044129	0.73	NBR	NBR	AL
400	4″	B1044133	1.21	NBR	NBR	AL
500	5″	B1044137	1.41	NBR	NBR	AL
600	6″	B1044141	2.16	NBR	NBR	AL
800	8″	B1044145	2.61	NBR	NBR	AL
1000	10″	–	–	NBR	NBR	AL
1200	12″	–	–	NBR	NBR	AL

050	1/2″	B1064116	0.16	NBR	NBR	BR
075	3/4″	B1064120	0.22	NBR	NBR	BR
100	1″	B1064124	0.32	NBR	NBR	BR
125	11/4″	B1064128	0.46	NBR	NBR	BR
150	11/2″	B1064132	0.54	NBR	NBR	BR
200	2″	B1064136	0.67	NBR	NBR	BR
250	21/2″	B1064140	0.94	NBR	NBR	BR
300	3″	B1064144	1.40	NBR	NBR	BR
400	4″	B1061148	2.09	NBR	NBR	BR
500	5″	B1064152	2.58	NBR	NBR	BR
600	6″	B1064156	5.02	NBR	NBR	BR
800	8″	B1064160	–	NBR	NBR	BR
1000	10″	–	–	NBR	NBR	BR
1200	12″	–	–	NBR	NBR	BR

Camlock E

Name	Size	Code	Weight(kg)	Material
050	1/2″	B1025001	0.07	SS
075	3/4″	B1025002	0.14	SS
100	1″	B1025003	0.25	SS
125	11/4″	B1025004	0.37	SS
150	11/2″	B1025005	0.56	SS
200	2″	B1025006	0.85	SS
250	21/2″	B1025007	1.17	SS
300	3″	B1025008	1.73	SS
400	4″	B1025009	2.85	SS
500	5″	B1025010	4.05	SS
600	6″	B1025011	5.64	SS
800	8″	B1025038	10.11	SS
1000	10″	–	–	SS
1200	12″	–	–	SS

050	1/2″	B1045001	0.03	AL
075	3/4″	B1045002	0.05	AL
100	1″	B1045003	0.09	AL
125	11/4″	B1045004	0.12	AL
150	11/2″	B1045005	0.19	AL
200	2″	B1045006	0.28	AL
250	21/2″	B1045007	0.45	AL
300	3″	B1045008	0.66	AL
400	4″	B1045009	1.13	AL
500	5″	B1045010	1.48	AL
600	6″	B1045011	2.21	AL
800	8″	B1045023	3.61	AL
1000	10″	–	–	AL
1200	12″	–	–	AL

050	1/2″	B1065001	0.11	BR
075	3/4″	B1065002	0.16	BR
100	1″	B1065003	0.24	BR
125	11/4″	B1065004	0.33	BR
150	11/2″	B1065005	0.44	BR
200	2″	B1065006	0.73	BR
250	21/2″	B1065007	0.96	BR
300	3″	B1065008	1.25	BR
400	4″	B1065009	1.91	BR
500	5″	B1065010	4.54	BR
600	6″	B1065011	5.07	BR
800	8″	–	–	BR
1000	10″	–	–	BR
1200	12″	–	–	BR

050	1/2″	B1075001	0.01	PP
075	3/4″	B1075002	0.03	PP
100	1″	B1075003	0.04	PP
125	11/4″	B1075004	0.07	PP
150	11/2″	B1075005	0.09	PP
200	2″	B1075006	0.15	PP
250	21/2″	B1075007	0.25	PP
300	3″	B1075008	0.35	PP
400	4″	B1075009	0.55	PP

Type E - Serrated hose shank

Name	Size	Code	Weight (kg)	Material
050	1/2″	B1025113	0.07	SS
075	3/4″	B1025101	0.14	SS
100	1″	B1025102	0.25	SS
125	11/4″	B1025103	0.37	SS
150	11/2″	B1025104	0.56	SS
200	2″	B1025105	0.85	SS
250	21/2″	B1025106	1.17	SS
300	3″	B1025107	1.73	SS
400	4″	B1025108	2.85	SS
500	5″	B1025109	4.05	SS
600	6″	B1025110	5.64	SS
800	8″	B1025111	10.11	SS
1000	10″	–	–	SS
1200	12″	–	–	SS
050	1/2″	B1045012	0.03	AL
075	3/4″	B1045013	0.05	AL
100	1″	B1045014	0.09	AL
125	11/4″	B1045015	0.12	AL
150	11/2″	B1045016	0.19	AL
200	2″	B1045104	0.28	AL
250	21/2″	B1045018	0.45	AL
300	3″	B1045019	0.66	AL
400	4″	B1045020	1.13	AL
500	5″	B1045021	1.48	AL
600	6″	B1045022	2.21	AL
800	8″	B1045025	3.61	AL
1000	10″	–	–	AL
1200	12″	–	–	AL
050	1/2″	B1065012	0.11	BR
075	3/4″	B1065013	0.16	BR
100	1″	B1065014	0.24	BR
125	11/4″	B1065015	0.33	BR
150	11/2″	B1065016	0.44	BR
200	2″	B1065017	0.73	BR
250	21/2″	B1065018	0.96	BR
300	3″	B1065019	1.25	BR
400	4″	B1065020	1.91	BR
500	5″	B1065021	4.54	BR
600	6″	B1065022	5.07	BR
800	8″	B1065035	7.13	BR
1000	10″	–	–	BR
1200	12″	–	–	BR
050	1/2″	B1075012	0.01	PP
075	3/4″	B1075013	0.03	PP
100	1″	B1075014	0.04	PP
125	11/4″	B1075015	0.07	PP
150	11/2″	B1075016	0.09	PP
200	2″	B1075017	0.15	PP
250	21/2″	B1075018	0.25	PP
300	3″	B1075019	0.35	PP
400	4″	B1075020	0.55	PP
600	6″	B1075022	0.75	PP

* the serrated suitable to safety clamps and crimping ferrules (only for SS BR AL)

Type E - Smooth shank EN 14420 - 7 (16 bars)

Name	Size	Code	Weight (kg)	Material
050	1/2″	B 1025012	0.07	SS
075	3/4″	B 1025013	0.13	SS
100	1″	B 1025014	0.20	SS
125	11/4″	B 1025015	0.33	SS
150	11/2″	B 1025016	0.45	SS
200	2″	B 1025017	0.58	SS
250	21/2″	B 1025018	0.96	SS
300	3″	B 1025019	1.16	SS
400	4″	B 1025020	2.26	SS

* Suitable for safety clamps and crimping ferrules.

050	1/2″	B 1065023	0.11	BR
075	3/4″	B 1065024	0.14	BR
100	1″	B 1065025	0.21	BR
125	11/4″	B 1065026	0.35	BR
150	11/2″	B 1065027	0.45	BR
200	2″	B 1065028	0.66	BR
250	21/2″	B 1065029	0.98	BR
300	3″	B 1065030	1.26	BR
400	4″	B 1065031	2.69	BR

* Suitable for safety clamps and crimping ferrules.

Camlock F (Male NPT Thread)

Name	Thread	Code	Weight (kg)	Material
050	1/2″	B1026001	0.13	SS
075	3/4″	B1026004	0.18	SS
100	1″	B1026009	0.25	SS
125	11/4″	B1026010	0.43	SS
150	11/2″	B1026012	0.51	SS
200	2″	B1026015	0.76	SS
250	21/2″	B1026018	0.84	SS
300	3″	B1026021	1.01	SS
400	4″	B1026024	1.73	SS
500	5″	B1026027	2.74	SS
600	6″	B1026030	4.28	SS
800	8″	B1026052	5.31	SS
1000	10″	–	–	SS
1200	12″	–	–	SS

050	1/2″	B1046001	0.05	AL
075	3/4″	B1046004	0.11	AL
100	1″	B1046007	0.14	AL
125	11/4″	B1046010	0.24	AL
150	11/2″	B1046013	0.27	AL
200	2″	B1046016	0.33	AL
250	21/2″	B1046019	0.41	AL
300	3″	B1046022	0.65	AL
400	4″	B1016025	0.92	AL
500	5″	B1046028	1.16	AL
600	6″	B1046031	1.78	AL
800	8″	B1046034	4.21	AL
1000	10″	–	–	AL
1200	12″	–	–	AL

050	1/2″	B1066001	0.12	BR
075	3/4″	B1066004	0.13	BR
100	1″	B1066007	0.27	BR
125	11/4″	B1066010	0.41	BR
150	11/2″	B1066013	0.48	BR
200	2″	B1066016	0.61	BR
250	21/2″	B1066019	0.77	BR
300	3″	B1066022	1.21	BR
400	4″	B1066025	1.87	BR
500	5″	B1066028	2.11	BR
600	6″	B1066031	3.72	BR
800	8″	–	–	BR
1000	10″	–	–	BR
1200	12″	–	–	BR

050	1/2″	B1076001	0.07	PP
075	3/4″	B1076004	0.07	PP
100	1″	B1076007	0.11	PP
125	11/4″	B1076010	0.21	PP
150	11/2″	B1076013	0.22	PP
200	2″	B1076016	0.24	PP
250	21/2″	B1076019	0.36	PP
300	3″	B1076022	0.43	PP
400	4″	B1076025	0.67	PP

Camlock F (Male BSPT Thread)

Name	Thread	Code	Weight (kg)	Material
050	½ ″	B 1026002	0.13	SS
075	¾ ″	B 1026005	0.18	SS
100	1″	B 1026008	0.25	SS
125	1¼ ″	B 1026011	0.43	SS
150	1½ ″	B 1026014	0.51	SS
200	2″	B 1026017	0.76	SS
250	2½ ″	B 1026020	0.84	SS
300	3″	B 1026023	1.01	SS
400	4″	B 1026026	1.73	SS
500	5″	B 1026029	2.74	SS
600	6″	B 1026032	4.28	SS
800	8″	B 1026053	5.31	SS
1000	10″	–	–	SS
1200	12″	–	–	SS

050	½ ″	B 1046002	0.05	AL
075	¾ ″	B 1046005	0.11	AL
100	1″	B 1046008	0.14	AL
125	1¼ ″	B 1046011	0.24	AL
150	1½ ″	B 1046014	0.27	AL
200	2″	B 1046017	0.33	AL
250	2½ ″	B 1046020	0.41	AL
300	3″	B 1046023	0.65	AL
400	4″	B 1016026	0.92	AL
500	5″	B 1046029	1.16	AL
600	6″	B 1046032	1.78	AL
800	8″	–	4.21	AL
1000	10″	–	–	AL
1200	12″	–	–	AL

050	½ ″	B 1066002	0.12	BR
075	¾ ″	B 1066005	0.13	BR
100	1″	B 1066008	0.27	BR
125	1¼ ″	B 1066011	0.41	BR
150	1½ ″	B 1066014	0.48	BR
200	2″	B 1066017	0.61	BR
250	2½ ″	B 1066020	0.77	BR
300	3″	B 1066023	1.21	BR
400	4″	B 1066026	1.87	BR
500	5″	B 1066029	2.11	BR
600	6″	B 1066032	3.72	BR
800	8″	–	–	BR
1000	10″	–	–	BR
1200	12″	–	–	BR

050	½ ″	B 1076002	0.07	PP
075	¾ ″	B 1076005	0.07	PP
100	1″	B 1076008	0.11	PP
125	1¼ ″	B 1076011	0.21	PP
150	1½ ″	B 1076014	0.22	PP
200	2″	B 1076017	0.24	PP
250	2½ ″	B 1076020	0.36	PP
300	3″	B 1076023	0.43	PP
400	4″	B 1076026	0.67	PP

Camlock DC (Gasket)

Name	Size	Code	Weight(kg)	Gasket	Material
050	1/2″	B 1028001	0.13	NBR	SS
075	3/4″	B 1028002	0.18	NBR	SS
100	1″	B 1028003	0.25	NBR	SS
125	11/4″	B 1028004	0.43	NBR	SS
150	11/2″	B 1028005	0.51	NBR	SS
200	2″	B 1028006	0.76	NBR	SS
250	21/2″	B 1028007	0.84	NBR	SS
300	3″	B 1028008	1.01	NBR	SS
400	4″	B 1028009	1.73	NBR	SS
500	5″	B 1028010	2.74	NBR	SS
600	6″	B 1028011	4.28	NBR	SS
800	8″	–	–	NBR	SS
1000	10″	–	–	NBR	SS
1200	12″	–	–	NBR	SS

050	1/2″	B 1048001	0.05	NBR	AL
075	3/4″	B 1048002	0.11	NBR	AL
100	1″	B 1048003	0.14	NBR	AL
125	11/4″	B 1048004	0.24	NBR	AL
150	11/2″	B 1048005	0.27	NBR	AL
200	2″	B 1048006	0.33	NBR	AL
250	21/2″	B 1048007	0.41	NBR	AL
300	3″	B 1048008	0.65	NBR	AL
400	4″	B 1048009	0.92	NBR	AL
500	5″	B 1048010	1.16	NBR	AL
600	6″	B 1048011	1.78	NBR	AL
800	8″	B 1048012	4.21	NBR	AL
1000	10″	–	–	NBR	AL
1200	12″	–	–	NBR	AL

050	1/2″	B 1068001	0.12	NBR	BR
075	3/4″	B 1068002	0.13	NBR	BR
100	1″	B 1068003	0.27	NBR	BR
125	11/4″	B 1068004	0.41	NBR	BR
150	11/2″	B 1068005	0.48	NBR	BR
200	2″	B 1068006	0.61	NBR	BR
250	21/2″	B 1068007	0.77	NBR	BR
300	3″	B 1068008	1.21	NBR	BR
400	4″	B 1068009	1.87	NBR	BR
500	5″	B 1068010	2.11	NBR	BR
600	6″	B 1068011	3.72	NBR	BR
800	8″	–	–	NBR	BR
1000	10″	–	–	NBR	BR
1200	12″	–	–	NBR	BR

050	1/2″	B 1078001	0.07	–	PP
075	3/4″	B 1078002	0.07	–	PP
100	1″	B 1078003	0.11	–	PP
125	11/4″	B 1078004	0.21	–	PP
150	11/2″	B 1078005	0.22	–	PP
200	2″	B 1078006	0.24	–	PP
250	21/2″	B 1078007	0.36	–	PP
300	3″	B 1078008	0.43	–	PP
400	4″	B 1078009	0.67	–	PP

✶ we can add a chain on request.

Camlock DP

Name	Size	Code	Weight (kg)	Accessories	Material
050	1/2″	B1027001	0.06	Chain	SS
075	3/4″	B1027002	0.08	Chain	SS
100	1″	B1027003	0.13	Chain	SS
125	11/4″	B1027004	0.25	Chain	SS
150	11/2″	B1027005	0.32	Chain	SS
200	2″	B1027006	0.46	Chain	SS
250	21/2″	B1027007	0.67	Chain	SS
300	3″	B1027008	0.93	Chain	SS
400	4″	B1027009	1.59	Chain	SS
500	5″	B1027010	1.91	Chain	SS
600	6″	B1027011	3.84	Chain	SS
800	8″	–	–	Chain	SS
1000	10″	–	–	Chain	SS
1200	12″	–	–	Chain	SS

050	1/2″	B1047001	0.02	Chain	AL
075	3/4″	B1047002	0.03	Chain	AL
100	1″	B1047003	0.05	Chain	AL
125	11/4″	B1047004	0.07	Chain	AL
150	11/2″	B1047005	0.12	Chain	AL
200	2″	B1047006	0.16	Chain	AL
250	21/2″	B1047007	0.22	Chain	AL
300	3″	B1047008	0.28	Chain	AL
400	4″	B1047009	0.51	Chain	AL
500	5″	B1047010	0.55	Chain	AL
600	6″	B1047011	0.74	Chain	AL
800	8″	B1047012	4.21	Chain	AL
1000	10″	–	–	Chain	AL
1200	12″	–	–	Chain	AL

050	1/2″	B1067001	0.07	Chain	BR
075	3/4″	B1067002	0.09	Chain	BR
100	1″	B1067003	0.13	Chain	BR
125	11/4″	B1067004	0.21	Chain	BR
150	11/2″	B1067005	0.24	Chain	BR
200	2″	B1067006	0.41	Chain	BR
250	21/2″	B1067007	0.59	Chain	BR
300	3″	B1067008	0.72	Chain	BR
400	4″	B1067009	1.03	Chain	BR
500	5″	B1067010	1.61	Chain	BR
600	6″	B1067011	1.81	Chain	BR
800	8″	–	–	Chain	BR
1000	10″	–	–	Chain	BR
1200	12″	–	–	Chain	BR

050	1/2″	B1077001	0.01	Chain	PP
075	3/4″	B1077002	0.01	Chain	PP
100	1″	B1077003	0.02	Chain	PP
125	11/4″	B1077004	0.04	Chain	PP
150	11/2″	B1077005	0.05	Chain	PP
200	2″	B1077006	0.08	Chain	PP
250	21/2″	B1077007	0.17	Chain	PP
300	3″	B1077008	0.22	Chain	PP
400	4″	B1077009	0.26	Chain	PP

✻ we can add a chain on request.

Camlock DC with special handle

Name	Size	Code	Weight (kg)	Gasket	Material
DN 32	11/4″	B 1048031	0.24	NBR	AL
DN 40	11/2″	B 1048032	0.27	NBR	AL
DN 50	2″	B 1048033	0.33	NBR	AL
DN 65	21/2″	B 1048034	0.41	NBR	AL
DN 80	3″	B 1048035	0.65	NBR	AL

Camlock adapter FW welding

Name	Weld Size	Code	Weight (kg)	Material
DN 15	21.3*2.3	B 1013054	0.07	SS
DN 20	26.9*2.3	B 1013055	0.11	SS
DN 25	33.7*2.6	B 1013056	0.15	SS
DN 32	42.2*2.6	B 1013057	0.24	SS
DN 40	48.3*2.6	B 1013058	0.32	SS
DN 50	60.3*2.9	B 1013059	0.42	SS
DN 65	76.1*2.9	B 1013060	0.71	SS
DN 80	88.9*3.2	B 1013061	0.73	SS
DN 100	114.3*3.6	B 1013062	1.42	SS
DN 125	139.7*3.6	B 1013063	–	SS
DN 150	168.3*4.5	B 1013064	–	SS

Camlock adapter BW welding

Name	WeldSize	Code	Weight (kg)	Gasket	Material
DN 15	21.3*2.3	B 1022366	0.12	NBR	SS
DN 20	26.9*2.3	B 1022360	0.20	NBR	SS
DN 25	33.7*2.6	B 1022357	0.29	NBR	SS
DN 32	42.2*2.6	B 1022365	0.47	NBR	SS
DN 40	48.3*2.6	B 1022355	0.54	NBR	SS
DN 50	60.3*2.9	B 1022367	0.67	NBR	SS
DN 65	76.1*2.9	B 1022368	1.14	NBR	SS
DN 80	88.9*3.2	B 1022369	1.35	NBR	SS
DN 100	114.3*3.6	B 1022361	1.97	NBR	SS
DN 125	139.7*4	B 1013052	2.98	NBR	SS
DN 150	168.3*4.5	B 1013053	4.11	NBR	SS

Camlock - Reduction (DD)

Code	Size	Gasked	Material
B1012093	11/2”x 11/2”dual coupler D type	NBR	AL
B1012094	2”x 2”dual coupler D type	NBR	AL
B1012095	3”x 3”dual coupler D type	NBR	AL
B1012096	4”x 4”dual coupler D type	NBR	AL
B1012086	6”x 6”dual coupler D type	NBR	AL

Camlock - Reduction (DA)

Code	Size	Gasked	Material
B1012055	1.1/2”coupler D type x 1”adapter A type	NBR	AL
B1012056	1.1/2”coupler D type x 2”adapter A type	NBR	AL
B1012057	2”coupler D type x 1.1/2”adapter A type	NBR	AL
B1012058	2”coupler D type x 3”adapter A type	NBR	AL
B1012059	2”coupler D type x 4”adapter A type	NBR	AL
B1012060	3”coupler D type x 11/2”adapter A type	NBR	AL
B1012061	3”coupler D type x 2”adapter A type	NBR	AL
B1012062	3”coupler D type x 21/2”adapter A type	NBR	AL
B1012063	3”coupler D type x 4”adapter A type	NBR	AL
B1012064	4”coupler D type x 2”adapter A type	NBR	AL
B1012065	4”coupler D type x 3”adapter A type	NBR	AL
B1012066	4”coupler D type x 6”adapter A type	NBR	AL
B1012067	6”coupler D type x 4”adapter A type	NBR	AL

Camlock - Reduction (AA)

Code	Size	Material
B1012097	dual adapter A type 1”x 1”	AL
B1012039	dual adapter A type 11/4”x 11/4”	AL
B1012040	dual adapter A type 11/2”x 11/2”	AL
B1012041	dual adapter A type 11/2”x 2”	AL
B1012098	dual adapter A type 2”x 2”	AL
B1012042	dual adapter A type 2”x 21/2”	AL
B1012043	dual adapter A type 2”x 3”	AL
B1012026	dual adapter A type 3”x 3”	AL
B1012044	dual adapter A type 3”x4”	AL
B1012045	dual adapter A type 4”x 4”	AL
B1012046	dual adapter A type 4”x6”	AL
B1012047	dual adapter A type 6”x 6”	AL

Camlock Reduction (AR)

Code	Size	Gasked	Material
B1012099	2”adapter A type with 3”female thread	NBR	AL
B1012100	3”adapter A type with 2”female thread	NBR	AL
B1012101	3”adapter A type with 4”female thread	NBR	AL
B1012102	4”adapter A type with 3”female thread	NBR	AL
B1012103	4”adapter A type with 6”female thread	NBR	AL
B1012104	6”adapter A type with 4”female thread	NBR	AL

Camlock Reduction (BR)

Code	Size	Gasked	Material
B1012106	1.1/2”coupler B type with 1”male thread	NBR	AL
B1012107	2”coupler B type with 11/2”male thread	NBR	AL
B1012108	3”coupler B type with 2”male thread	NBR	AL
B1012109	3”coupler B type with 4”male thread	NBR	AL
B1012110	4”coupler B type with 3”male thread	NBR	AL

Camlock Reduction (CR)

Code	Size	Gasked	Material
B1012111	3”coupler C type with 2”hose tail	NBR	AL
B1012112	3”coupler C type with 4”hose tail	NBR	AL
B1012113	4”coupler C type with 3”hose tail	NBR	AL

Camlock Reduction (ER)

Code	Size	Material
B1012018	3”adapter E type with 2”hose tail	AL
B1012019	4”adapter E type with 2”hose tail	AL
B1012020	4”adapter E type with 3”hose tail	AL

Camlock Reduction (FR)

Code	Size	Material
B1012105	3”adapter F type with 1.1/2”maBe thread	AL
B1012021	3”adapter F type with 2”maBe thread	AL
B1012022	3”adapter F type with 3”maBe thread	AL
B1012023	3”adapter F type with 4”maBe thread	AL
B1012024	4”adapter F type with 3”maBe thread	AL

Camlock - CVR

Code	Size	Gasket	Material
B1012016	4”coupler with 3”hose tail	NBR	AL
B1012017	4”coupler with 4”hose tail	NBR	AL

Camlock - DVR

Code	Size	Gasket	Material
B1012015	4”coupler with 3”female thread	NBR	AL

Camlock - API

Code	Size	Gasket	Material
B1012001	6”coupler with 3”male thread	NBR	AL

Camlock - API (without sight glass)

Code	Size	Gasket	Material
B1012002	6”coupler with 3”adapter	NBR	AL

Camlock - API (with thread)

Code	Size	Gasket	Material
B1012003	6”coupler with 3”adapter	NBR	AL

Camlock Flange (AFL)

Name	Size	Code	Weight (kg)	Material
DN 25	1″	B1033005	1.35	SS
DN 50	2″	B1033006	3.29	SS
DN 80	3″	B1033007	4.80	SS
DN 100	4″	B1033008	7.21	SS
DN 125	5″	B1033009	9.82	SS
DN 150	6″	B1033010	13.86	SS
DN 80	3″	B1033001	2.24	AL
DN 100	4″	B1033002	3.67	AL
DN 125	5″	B1033003	5.24	AL
DN 150	6″	B1033004	7.67	AL

* Flange PN according your needs.

Camlock Flange (BFL)

Name	Inch	Code	Weight (kg)	Gasket	Material
DN 25	1/2″	B1033011	1.09	NBR	SS
DN 50	3/4″	B1033012	2.87	NBR	SS
DN 80	1″	B1033013	5.16	NBR	SS
DN 100	11/4″	B1033014	7.44	NBR	SS
DN 125	11/2″	B1033015	9.86	NBR	SS
DN 150	2″	B1033016	11.77	NBR	SS

* Flange PN according your needs.

Type C - swivel 360° smooth hose tail

Name	Size	Code	Weight (kg)	Gasked	Material
DN 50	2″	B1023122	0.71	NBR	SS
DN 65	21/2″	B1023123	1.01	NBR	SS
DN 80	3″	B1023124	1.31	NBR	SS
DN 100	4″	B1023125	2.14	NBR	SS

Typc C 90° hose shank

Name	Size	Code	Weight (kg)	Gasked	Material
DN 150	11/2″	B1036001	1.71	NBR	SS
DN 200	2″	B1036002	2.01	NBR	SS
DN 150	11/2″	B1036003	1.24	NBR	AL
DN 200	2″	B1036004	1.67	NBR	AL

GASKET - NBR

Name	Size	Code	OD	ID	H	Colour	Material
DN 15	1/2″	B 1090017	26.5	17.5	4.0	Black	NBR
DN 20	3/4″	B 1090076	35	22	5.5	Black	NBR
DN 25	1″	B 1090077	40	27	6.4	Black	NBR
DN 32	11/4″	B 1090078	50	35	6.4	Black	NBR
DN 40	11/2″	B 1090079	56	41	6.4	Black	NBR
DN 50	2″	B 1090080	67	51	6.4	Black	NBR
DN 65	21/2″	B 1090081	80	60	6.4	Black	NBR
DN 80	3″	B 1090082	95	76	6.4	Black	NBR
DN 100	4″	B 1090083	124	102	6.4	Black	NBR
DN 125	5″	B 1090084	150.5	124	6.4	Black	NBR
DN 150	6″	B 1090085	180	153	6.4	Black	NBR
DN 200	8″	B 1090086	232.5	203.5	7.9	Black	NBR

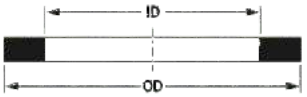

GASKET - EPDM

Name	Size	Code	OD	ID	H	Colour	Material
DN 15	1/2″	B 1090099	26.5	17.5	4.0	Black	EPDM
DN 20	3/4″	B 1090100	35	22	5.5	Black	EPDM
DN 25	1″	B 1090101	40	27	6.4	Black	EPDM
DN 32	11/4″	B 1090102	50	35	6.4	Black	EPDM
DN 40	11/2″	B 1090103	56	41	6.4	Black	EPDM
DN 50	2″	B 1090104	67	51	6.4	Black	EPDM
DN 65	21/2″	B 1090105	80	60	6.4	Black	EPDM
DN 80	3″	B 1090106	95	76	6.4	Black	EPDM
DN 100	4″	B 1090107	124	102	6.4	Black	EPDM
DN 125	5″	B 1090108	150.5	124	6.4	Black	EPDM
DN 150	6″	B 1090109	180	153	6.4	Black	EPDM
DN 200	8″	B 1090110	232.5	203.5	7.9	Black	EPDM

GASKET - FPM (Viton ®)

Name	Size	Code	OD	ID	H	Colour	Material
DN 15	1/2″	B1090135	26.5	17.5	4.0	Green	FPM
DN 20	3/4″	B1090136	35	22	5.5	Green	FPM
DN 25	1″	B1090137	40	27	6.4	Green	FPM
DN 32	11/4″	B1090138	50	35	6.4	Green	FPM
DN 40	11/2″	B1090139	56	41	6.4	Green	FPM
DN 50	2″	B1090140	67	51	6.4	Green	FPM
DN 65	21/2″	B1090141	80	60	6.4	Green	FPM
DN 80	3″	B1090142	95	76	6.4	Green	FPM
DN 100	4″	B1090143	124	102	6.4	Green	FPM
DN 125	5″	B1090144	150.5	124	6.4	Green	FPM
DN 150	6″	B1090145	180	153	6.4	Green	FPM
DN 200	8″	B1090146	232.5	203.5	7.9	Green	FPM

GASKET - CSM (Hypalon ®)

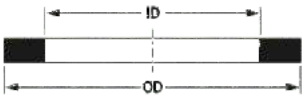

Name	Size	Code	OD	ID	H	Colour	Material
DN 15	1/2″	B1090147	26.5	17.5	4.0	Green	CSM
DN 20	3/4″	B1090148	35	22	5.5	Green	CSM
DN 25	1″	B1090149	40	27	6.4	Green	CSM
DN 32	11/4″	B1090150	50	35	6.4	Green	CSM
DN 40	11/2″	B1090151	56	41	6.4	Green	CSM
DN 50	2″	B1090152	67	51	6.4	Green	CSM
DN 65	21/2″	B1090153	80	60	6.4	Green	CSM
DN 80	3″	B1090154	95	76	6.4	Green	CSM
DN 100	4″	B1090155	124	102	6.4	Green	CSM
DN 125	5″	B1090156	150.5	124	6.4	Green	CSM
DN 150	6″	B1090157	180	153	6.4	Green	CSM
DN 200	8″	B1090158	232.5	203.5	7.9	Green	CSM

OPEN ENVELOPE PTFE - NBR

Name	Size	Code	OD	ID	H	Colour	Material
DN 15	1/2″	B1090037	26.5	17.5	4.0	White-Black	PTFE-NBR
DN 20	3/4″	B1090219	35	22	5.5	White-Black	PTFE-NBR
DN 25	1″	B1090220	40	27	6.4	White-Black	PTFE-NBR
DN 32	11/4″	B1090221	50	35	6.4	White-Black	PTFE-NBR
DN 40	11/2″	B1090222	56	41	6.4	White-Black	PTFE-NBR
DN 50	2″	B1090223	67	51	6.4	White-Black	PTFE-NBR
DN 65	21/2″	B1090224	80	60	6.4	White-Black	PTFE-NBR
DN 80	3″	B1090225	95	76	6.4	White-Black	PTFE-NBR
DN 100	4″	B1090226	124	102	6.4	White-Black	PTFE-NBR
DN 125	5″	B1090227	150.5	124	6.4	White-Black	PTFE-NBR
DN 150	6″	B1090228	180	153	6.4	White-Black	PTFE-NBR
DN 200	8″	B1090229	232.5	203.5	7.9	White-Black	PTFE-NBR

OPEN ENVELOPE PTFE - EPDM

Name	Size	Code	OD	ID	H	Colour	Material
DN 15	1/2″	B1090195	26.5	17.5	4.0	White-Black	PTFE-EPDM
DN 20	3/4″	B1090196	35	22	5.5	White-Black	PTFE-EPDM
DN 25	1″	B1090197	40	27	6.4	White-Black	PTFE-EPDM
DN 32	11/4″	B1090198	50	35	6.4	White-Black	PTFE-EPDM
DN 40	11/2″	B1090199	56	41	6.4	White-Black	PTFE-EPDM
DN 50	2″	B1090200	67	51	6.4	White-Black	PTFE-EPDM
DN 65	21/2″	B1090201	80	60	6.4	White-Black	PTFE-EPDM
DN 80	3″	B1090202	95	76	6.4	White-Black	PTFE-EPDM
DN 100	4″	B1090203	124	102	6.4	White-Black	PTFE-EPDM
DN 125	5″	B1090204	150.5	124	6.4	White-Black	PTFE-EPDM
DN 150	6″	B1090205	180	153	6.4	White-Black	PTFE-EPDM
DN 200	8″	B1090206	232.5	203.5	7.9	White-Black	PTFE-EPDM

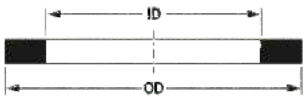

OPEN ENVELOPE FTFE - FPM

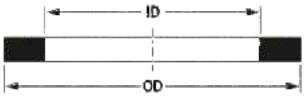

Name	Size	Code	OD	ID	H	Colour	Material
DN 15	1/2″	B1090207	26.5	17.5	4.0	White-Black	PTFE-FPM
DN 20	3/4″	B1090208	35	22	5.5	White-Black	PTFE-FPM
DN 25	1″	B1090209	40	27	6.4	White-Black	PTFE-FPM
DN 32	11/4″	B1090210	50	35	6.4	White-Black	PTFE-FPM
DN 40	11/2″	B1090211	56	41	6.4	White-Black	PTFE-FPM
DN 50	2″	B1090212	67	51	6.4	White-Black	PTFE-FPM
DN 65	21/2″	B1090213	80	60	6.4	White-Black	PTFE-FPM
DN 80	3″	B1090214	95	76	6.4	White-Black	PTFE-FPM
DN 100	4″	B1090215	124	102	6.4	White-Black	PTFE-FPM
DN 125	5″	B1090216	150.5	124	6.4	White-Black	PTFE-FPM
DN 150	6″	B1090217	180	153	6.4	White-Black	PTFE-FPM
DN 200	8″	B1090218	232.5	203.5	7.9	White-Black	PTFE-FPM

THREAD SEAL - PTFE

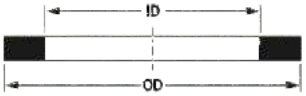

Name	Size	Code	OD	ID	H	Colour	Material
DN 15	1/2″	B1090171	26	19	1.5	White	PTFE
DN 20	3/4″	B1090172	33	24	2	White	PTFE
DN 25	1″	B1090173	42	33	2	White	PTFE
DN 32	11/4″	B1090174	48	39	2	White	PTFE
DN 40	11/2″	B1090175	60	49	2	White	PTFE
DN 50	2″	B1090176	76	63	2	White	PTFE
DN 65	21/2″	B1090177	88	77	2.5	White	PTFE
DN 80	3″	B1090178	114	100	3	White	PTFE
DN 100	4″	B1090179	124	102	3	White	PTFE
DN 125	5″	B1090180	150.5	124	3	White	PTFE
DN 150	6″	B1090181	180	153	3	White	PTFE
DN 200	8″	B1090182	232.5	203.5	4	White	PTFE

THREAD SEAL - PU

Name	Size	Code	OD	ID	H	Colour	Material
DN 15	1/2″	B9001873	26	19	1.5	BLUE	PU
DN 20	3/4″	B9001874	33	24	2	BLUE	PU
DN 25	1″	B9001875	42	33	2	BLUE	PU
DN 32	11/4"	B9001876	48	39	2	BLUE	PU
DN 40	11/2"	B9001877	60	49	2	BLUE	PU
DN 50	2″	B9001878	76	63	2	BLUE	PU
DN 65	21/2"	B9001879	88	77	2.5	BLUE	PU
DN 80	3″	B9001880	114	100	3	BLUE	PU
DN 100	4″	B9001881	124	102	3	BLUE	PU
DN 125	5″	B9001882	150.5	124	3	BLUE	PU
DN 150	6″	B9001883	180	153	3	BLUE	PU
DN 200	8″	B9001884	232.5	203.5	4	BLUE	PU

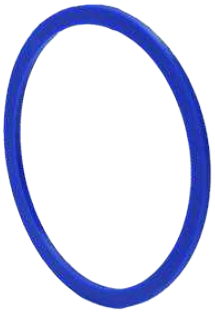

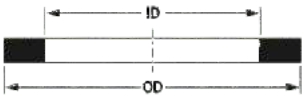

THREAD SEAL - NBR

Name	Size	Code	OD	ID	H	Colour	Material
DN 15	1/2″	B9001825	26	19	1.5	Black	NBR
DN 20	3/4″	B9001826	33	24	2	Black	NBR
DN 25	1″	B9001827	42	33	2	Black	NBR
DN 32	11/4″	B9001828	48	39	2	Black	NBR
DN 40	11/2″	B9001829	60	49	2	Black	NBR
DN 50	2″	B9001830	76	63	2	Black	NBR
DN 65	21/2″	B9001831	88	77	2.5	Black	NBR
DN 80	3″	B9001832	114	100	3	Black	NBR
DN 100	4″	B9001833	124	102	3	Black	NBR
DN 125	5″	B9001834	150.5	124	3	Black	NBR
DN 150	6″	B9001835	180	153	3	Black	NBR
DN 200	8″	B9001836	232.5	203.5	4	Black	NBR

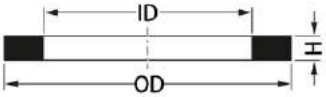

HANDLE SET: Handle + ring + pin + clip

Name	Size	Code	Material
DN 15-20	1/2″-3/4″	B1009078	SS
DN 25	1″	B1009079	SS
DN 32-65	11/4″-21/2″	B1009080	SS
DN 80-125	3″-5″	B1009081	SS
DN 150	6″	B1009096	SS

PULL RING

Name	Size	Code	Material
DN 15-25	1/2″-1″	B1090289	SS
DN 32-65	11/4″-21/2″	B1090290	SS
DN 80-125	3″-6”	B1090291	SS

PIN

Name	Size	Code	Material
DN 15-20	1/2″-3/4″	B1090233	SS
DN 25	1″	B1090234	SS
DN 32-65	11/4″-21/2″	B1090237	SS
DN 80-100	3″-4″	B1090238	SS

SAFETY CLIP

Name	Code	Material
SAFETY CLIP	B1090046	SS

CHAIN WITH S - HOOK

Name	Size	Code	Material
CHAIN WITH S-HOOK	200mm	B0110001	SS
CHAIN WITH S-HOOK	300mm	B0110002	SS

NPT Nipple

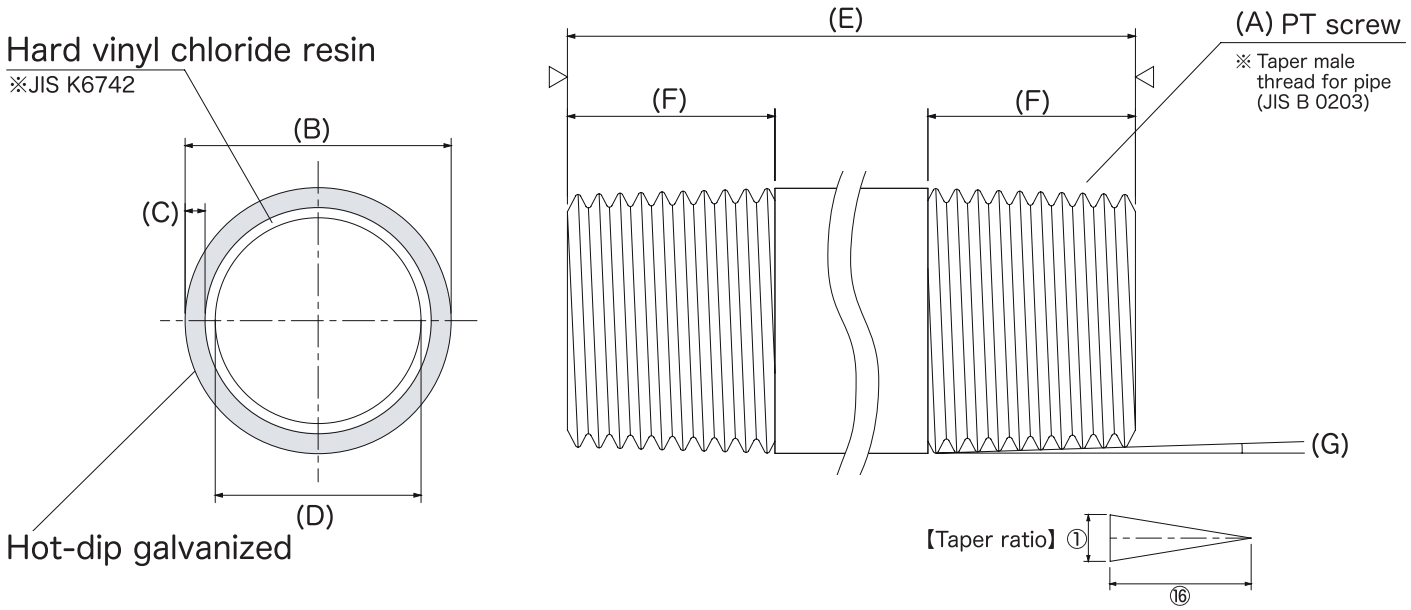

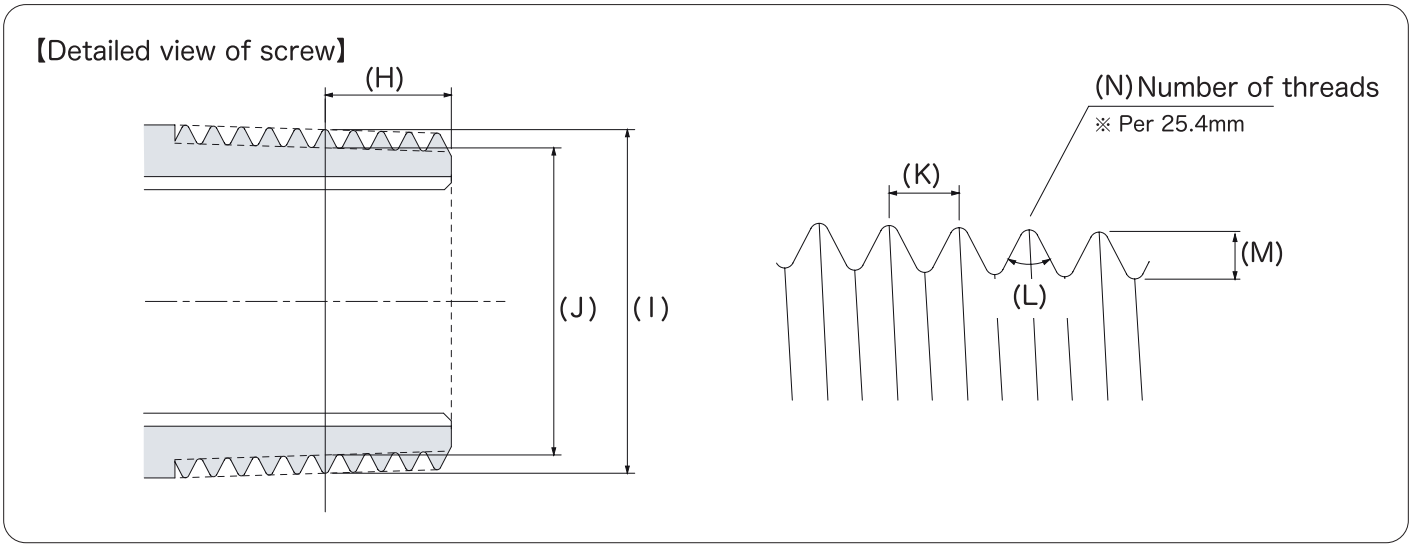

※ Dimensional unit is mm

A	Size	15A	20A	25A	32A	40A	50A	65A	80A	100A	125A	150A
B	Outer diameter(Φ)	21.7	27.2	34.0	42.7	48.6	60.5	76.3	89.1	114.3	139.8	165.2
C	Thickness(t)	2.8	2.8	3.2	3.5	3.5	3.8	4.2	4.2	4.5	4.5	5.0
D	Inner diameter(Φ)	13.1	18.6	24.6	32.7	38.6	49.9	64.9	76.7	101.3	126.8	150.2
E	Short nipple dimensions	34	38	42	50	50	58	70	78	90	103	103
F	Screw dimensions	16.5	18.5	20.5	24.5	24.5	28.5	34.5	38.5	44.5	50	50
G	Taper angle	1.7899°	1.7899°	1.7899°	1.7899°	1.7899°	1.7899°	1.7899°	1.7899°	1.7899°	1.7899°	1.7899°
H	Effective thread size	8.16	9.53	10.39	12.7	12.7	15.88	17.46	20.64	25.4	28.58	28.58
I	Effective diameter(Φ)	20.955	26.441	33.249	41.91	47.803	59.614	75.184	87.884	113.03	138.43	163.83
J	Effective valley diameter(Φ)	18.631	24.117	30.291	38.952	44.845	56.656	72.226	84.926	110.072	135.472	160.872
K	Screw pitch	1.8143	1.8143	2.3091	2.3091	2.3091	2.3091	2.3091	2.3091	2.3091	2.3091	2.3091
L	Thread angle	55°	55°	55°	55°	55°	55°	55°	55°	55°	55°	55°
M	Thread height	1.162	1.162	1.479	1.479	1.479	1.479	1.479	1.479	1.479	1.479	1.479
N	Number of threads	14	14	11	11	11	11	11	11	11	11	11

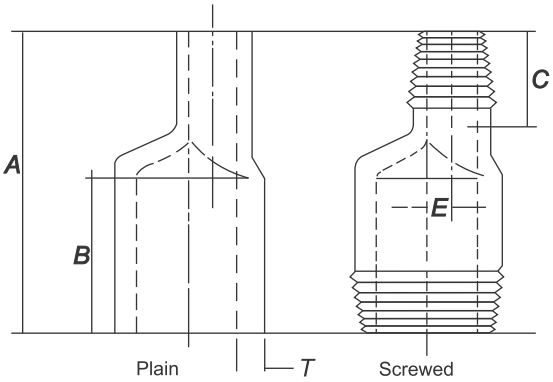

ECCENTRIC

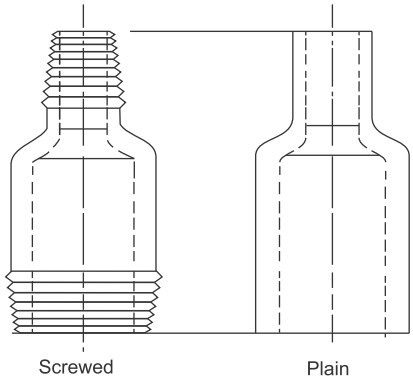

CONCENTRIC

SWAGE NIPPLES [MSS SP 95 - 2018]

Nominal Pipe Size	A	B	C	E	E
	Parallel length			Eccentricity E	
	(min.) A	(min.) B	(min.) C	3000	6000
10 x 8	76	48	16	1.6	-
15 x 10	89	56	19	1.6	-
15 x 8	89	56	19	3.2	-
20 x 15	95	57	22	2.4	2.4
20 x 10	95	57	22	4.0	-
25 x 20	102	64	22	2.8	2.0
25 x 15	102	64	22	5.2	4.4
40 x 25	114	70	25	6.7	6.4
40 x 20	114	70	25	9.5	8.3
40 x 15	114	70	25	11.9	10.7
50 x 40	165	108	29	5.6	5.2
50 x 25	165	108	29	12.7	11.5
50 x 20	165	108	29	15.5	13.5
40 x 15	165	108	29	17.5	15.9
65 x 50	178	114	32	4.8	3.2
65 x 40	178	114	32	10.3	8.3
80 x 65	203	133	41	7.1	6.7
80 x 50	203	133	41	11.9	9.9
80 x 40	203	133	41	17.5	15.5
100 x 80	229	140	48	11.9	10.7
100 x 65	229	140	48	19.1	17.5

NOTES :
1. All dimensions given in millimeter.
2. Thickness and outside diameters of swage nipples shall correspond to those of the appropriate nominal pipe size.
3. All dimensions herein above are nominal and subject to normal manufacturing tolerances.

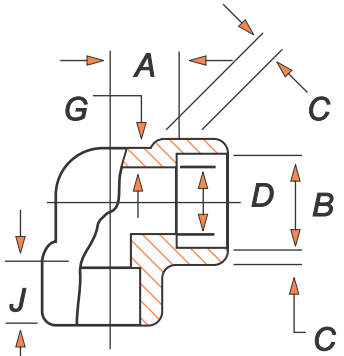

90° ELBOW
B

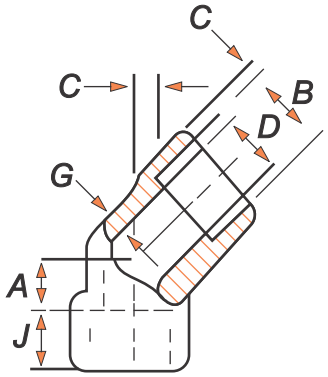

45° ELBOW

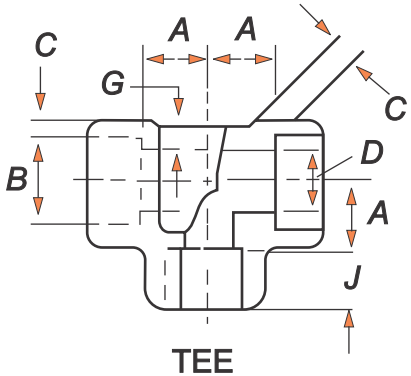

TEE

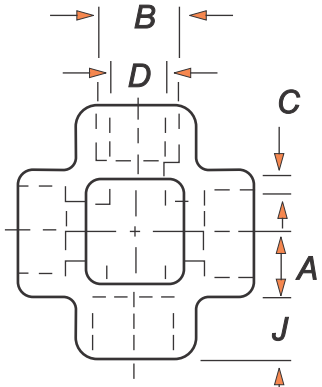

CROSS

DIMENSIONS OF SOCKET - WELDING FITTINGS (ASME B16.11 - 2016)

Nominal Pipe Size	B Socket Bore Diam		D Bore Diameter of Fitting						C Socket Wall Thickness [Note] (1)						G Body Wall			J Socket Depth, J	A Center-to-Bottom of Socket						
			3000		6000		9000		3000		6000		9000		3000	6000	9000		90 El, Cross, Tee			45-deg Elbow			Tol ±
	Max.	Min.	Max.	Min.	Max.	Min.	Max.	Min.	Avg.	Min.	Avg.	Min.	Avg.	Min.	Min.	Min.	Min.	Min.	3000	6000	9000	3000	6000	9000	
1/8	11.2	10.8	7.6	6.1	4.8	3.2	...	...	3.18	3.18	3.96	3.43	...	...	2.41	3.15	...	9.5	11.0	11.0	...	8.0	8.0	...	1.0
1/4	14.6	14.2	10.0	8.5	7.1	5.6	...	...	3.78	3.30	4.60	4.01	...	...	3.02	3.68	...	9.5	11.0	13.5	...	8.0	8.0	...	1.0
3/8	18.0	17.6	13.3	11.8	9.9	8.4	...	...	4.01	3.50	5.03	4.37	...	...	3.20	4.01	...	9.5	13.5	15.5	...	8.0	11.0	...	1.5
1/2	22.2	21.8	16.6	15.0	12.5	11.0	7.2	5.6	4.67	4.09	5.97	5.18	9.35	8.18	3.73	4.78	7.47	9.5	15.5	19.0	25.5	11.0	12.5	5.5	1.5
3/4	27.6	27.2	21.7	20.2	16.3	14.8	11.8	10.3	4.90	4.27	6.96	6.04	9.78	8.56	3.91	5.56	7.82	12.5	19.0	22.5	28.5	13.0	14.0	19.0	1.5
1	34.3	33.9	27.4	25.9	21.5	19.9	16.0	14.4	5.69	4.98	7.92	6.93	11.38	9.96	4.55	6.35	9.09	12.5	22.5	27.0	32.0	14.0	17.5	20.5	2.0
1 1/4	43.1	42.7	35.8	34.3	30.2	28.7	23.5	22.0	6.07	5.28	7.92	6.93	12.14	10.62	4.85	6.35	9.70	12.5	27.0	32.0	35.0	17.5	20.5	22.5	2.0
1 1/2	49.2	48.8	41.6	40.1	34.7	33.2	28.7	27.2	6.35	5.54	8.92	7.80	12.70	11.12	5.08	7.14	10.15	12.5	32.0	38.0	38.0	20.5	25.5	25.5	2.0
2	61.7	61.2	53.3	51.7	43.6	42.1	38.9	37.4	6.93	6.04	10.92	9.50	13.84	12.12	5.54	8.74	11.07	16.0	38.0	41.0	54.0	25.5	28.5	28.5	2.0
2 1/2	74.4	73.9	64.2	61.2	...	...	...	...	8.76	7.67	...	...	...	...	7.01	...	...	16.0	41.0	...	...	28.5	...	...	2.5
3	90.3	89.8	79.4	76.4	...	...	...	...	9.52	8.30	...	...	...	...	7.62	...	...	16.0	57.0	...	...	32.0	...	...	2.5
4	115.7	115.2	103.8	100.7	...	...	...	...	10.69	9.35	...	...	...	...	8.56	...	...	19.0	66.5	...	...	41.0	...	...	2.5

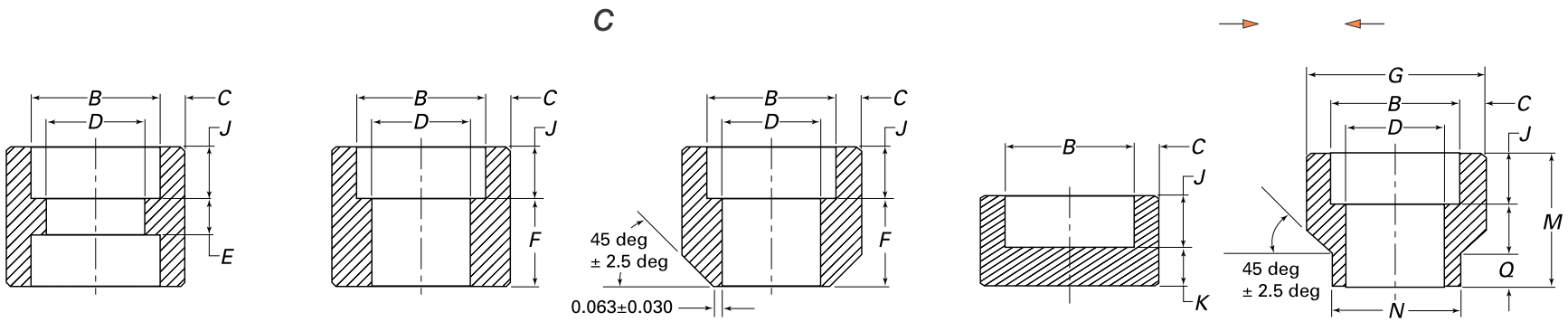

Coupling | Half-Coupling | Boss | Cap | Couplet

DIMENSIONS OF SOCKET - WELDING FITTINGS (ANSI B16.11)

Nominal Pipe Size	B Socket Bore Dia.		D Bore Diameter of Fittings						C Socket Wall Thickness [Note] (1)						G Outside Dia, Couplet		Tol	J Socket Depth	E laying Lgth.	Tol	F laying Lgth.	Tol	K End Wall Thickness			M End to End Couplet	Tol	N Weld Ring Diameter	Tol	Q Weld Ring Length	Tol
			3000		6000		9000		3000		6000		9000										3000	6000	9000						
	Max.	Min.	Max.	Min.	Max.	Min.	Max.	Min.	Avg.	Min.	Avg.	Min.	Avg.	Min.	3000	6000	±	Min.		±		±	Min.	Min.	Min.		±		±	3000 /6000	±
1/8	11.2	10.8	7.6	6.1	4.8	3.2	...	...	3.18	3.18	3.96	3.43	...	...	...	...	±1.5/-0.0	9.5	6.5	1.5	16.0	1.5	4.8	6.4	···	...	...	...	±1.5/-0.0	...	...
1/4	14.6	14.2	10.0	8.5	71	5.6	...	...	3.78	3.30	4.60	4.01	....	...	23.8	25.4	±1.5/-0.0	9.5	6.5	1.5	16.0	1.5	4.8	6.4	···	30.2	±0.8/-0.0	17.5	±1.5/-0.0	9.5	0.8
3/8	18.0	17.6	13.3	11.8	9.9	8.4	...	...	4.01	3.50	5.03	4.37	....	...	27.0	31.8	±1.5/-0.0	9.5	6.5	3.0	17.5	3.0	4.8	6.4	···	30.2	±0.8/-0.0	20.7	±1.5/-0.0	9.5	0.8
1/2	22.2	21.8	16.6	15.0	12.5	11.0	7.2	5.6	4.67	4.09	5.97	5.18	9.35	8.18	33.4	38.1	±1.5/-0.0	9.5	9.5	3.0	22.5	3.0	6.4	7.9	11.2	33.4	±0.8/-0.0	23.8	±1.5/-0.0	9.5	0.8
3/4	27.6	27.2	21.7	20.2	16.3	14.8	11.8	10.3	4.90	4.27	6.96	6.04	9.78	8.56	38.1	44.5	±1.5/-0.0	12.5	9.5	3.0	24.0	3.0	6.4	7.9	12.7	34.9	±0.8/-0.0	27.0	±1.5/-0.0	9.5	0.8
1	34.3	33.9	27.4	25.9	21.5	19.9	16.0	14.4	5.69	4.98	7.92	6.93	11.38	9.96	46.1	57.2	±1.5/-0.0	12.5	12.5	4.0	28.5	4.0	9.6	11.2	14.2	47.6	±0.8/-0.0	42.9	±1.5/-0.0	9.5	0.8
1 1/4	43.1	42.7	35.8	34.3	30.2	28.7	23.5	22.0	6.07	5.28	7.92	6.93	12.14	10.62	55.6	63.5	±1.5/-0.0	12.5	12.5	4.0	30.0	4.0	9.6	11.2	14.2	47.6	±0.8/-0.0	42.9	±1.5/-0.0	9.5	0.8
1 1/2	49.2	48.8	41.6	40.1	34.7	33.2	28.7	27.2	6.35	5.54	8.92	7.80	12.70	11.12	63.5	76.2	±1.5/-0.0	12.5	12.5	4.0	32.0	4.0	11.2	12.7	15.7	50.8	±0.8/-0.0	49.2	±1.5/-0.0	9.5	0.8
2	61.7	61.2	53.3	51.7	43.6	42.1	38.9	37.4	6.93	6.04	10.92	9.50	13.84	12.21	79.4	92.1	±1.5/-0.0	16.0	19.0	4.0	41.0	4.0	12.7	15.7	19.0	57.2	±1.5/-0.0	61.9	±1.5/-0.0	9.5	0.8
2 1/2	74.4	73.9	64.2	61.2	...	...	...	...	8.76	7.67	...	...	...	...	92.1	108.0	±1.5/-0.0	16.0	19.0	5.0	43.0	5.0	15.7	19.0	···	63.5	±1.5/-0.0	73.0	±1.5/-0.0	9.5	0.8
3	90.3	89.8	79.4	76.4	...	...	...	...	9.52	8.30	...	...	...	...	111.1	127.0	±1.5/-0.0	16.0	19.0	5.0	44.5	5.0	19.0	22.4	···	69.9	±1.5/-0.0	88.9	±1.5/-0.0	9.5	0.8
4	115.7	115.2	103.8	100.7	...	...	...	...	10.69	9.35	...	...	...	...	141.3	158.8	±1.5/-0.0	19.0	19.0	5.0	48.0	5.0	22.4	28.4	···	76.2	±1.5/-0.0	114.3	±1.5/-0.0	9.5	0.8

GENERAL NOTE : Dimensions are in millimeters.

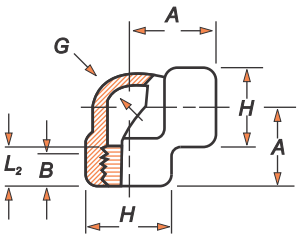

90° ELBOW

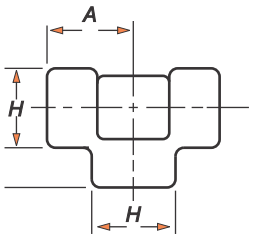

TEE

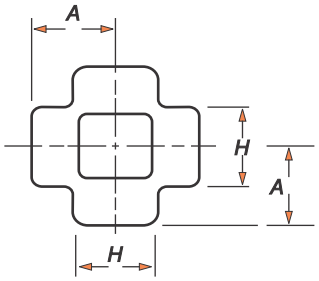

CROSS

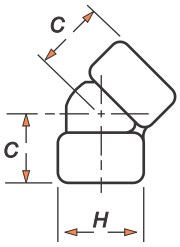

45° ELBOW

DIMENSIONS OF FORGED THREADED FITTINGS [ASME B 16.11-2016]

Nominal Pipe Size		A Center-to-End Elbows, Tees, Crosses, A			C Center-to-End 45 deg Elbow, C			H Outside Diameter of Band, H			G Min. Wall Thickness, G			B Min. Length of Thread	
(mm)	(Inch)	2000	3000	6000	2000	3000	6000	2000	3000	6000	2000	3000	6000	B	L2
6	1/8	21	21	25	17	17	19	22	22	25	3.18	3.18	6.35	6.4	6.7
8	1/4	21	25	28	17	19	22	22	25	33	3.18	3.30	6.60	8.1	10.2
10	3/8	25	28	33	19	22	25	25	33	38	3.18	3.51	6.98	9.1	10.4
15	1/2	28	33	38	22	25	28	33	38	46	3.18	4.09	8.15	10.9	13.6
20	3/4	33	38	44	25	28	33	38	46	56	3.18	4.32	8.53	12.7	13.9
25	1	38	44	51	28	33	35	46	56	62	3.68	4.98	9.93	14.7	17.3
32	1.1/4	44	51	60	33	35	43	56	62	75	3.89	5.28	10.59	17.0	18.0
40	1.1/2	51	60	64	35	43	44	62	75	84	4.01	5.56	11.07	17.8	18.4
50	2	60	64	83	43	44	52	75	84	102	4.27	7.14	12.09	19.0	19.2
65	2.1/2	76	83	95	52	52	64	92	102	121	5.61	7.65	15.29	23.6	28.9
80	3	86	95	106	64	64	79	109	121	146	5.99	8.84	16.64	25.9	30.5
100	4	106	114	114	79	79	79	146	152	152	6.55	11.18	18.67	27.7	33.0

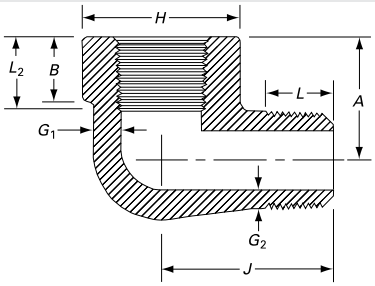

Threaded Street Elbow

Nominal Pipe Size, NPS	A Center-to-Female End Street Ells, Class Designation		J Center-to-F emale End Street Ells Class Designation		H Outside Diameter of Band Class Designation		G_1 Minimum Wall Thickness Class Designation		G_2 Minimum Wall Thickness Class Designation		B L_2 Minimum Length Internal Thread		L Minimum Length Male Thread
	3000	6000	3000	6000	3000	6000	3000	6000	3000	6000	B	L2	
1⁄8	19	22	25	32	19	25	3.18	5.08	2.74	4.22	6.4	6.7	10
1⁄4	22	25	32	38	25	32	3.30	5.66	3.22	5.28	8.1	10.2	11
3⁄8	25	28	38	41	32	38	3.51	6.98	3.50	5.59	9.1	10.4	13
1⁄2	28	35	41	48	38	44	4.09	8.15	4.16	6.53	10.9	13.6	14
3⁄4	35	44	48	57	44	51	4.32	8.53	4.88	6.86	12.7	13.6	16
1	44	51	57	66	51	62	4.98	9.93	5.56	7.95	14.7	17.3	19
1 1⁄4	51	54	66	71	62	70	5.28	10.59	5.56	8.48	17.0	18.0	21
1 1⁄2	54	64	71	84	70	84	5.56	11.07	6.25	8.89	17.8	18.4	21
2	64	83	84	105	84	102	7.14	12.09	7.64	9.70	19.0	19.2	22

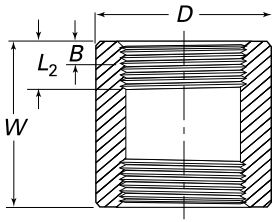

Coupling

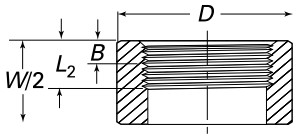

Half-Coupling

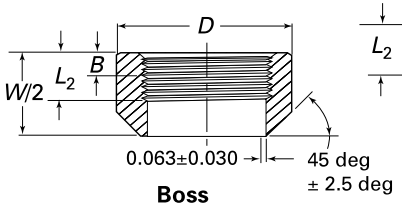

Boss

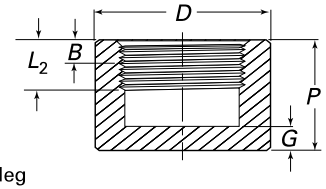

Cap

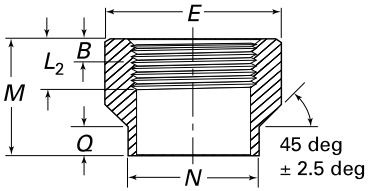

Couplet

Threaded Couplings, Bosses Cups, and Couplets

Nominal Pipe Size	D Outside Diameter,		E Outside Diameter, Couplet		Tol.	W End-to-End Coupling	P End-to-End Caps		End-to-End Coupling	Tol.	G Minimum End Wall Thickness		Q Weld Ring Length	Tol.	N Weld Ring Diameter	Tol.	B Minimum Length of Thread [Note(1)]	L_2
	3000	6000	3000	6000	+-	3000/6000	3000	6000	3000/6000	+-	3000	6000	3000/6000	+-	3000/6000	+-	3000/6000	
1/8	16	22	...	...	...	32	19	22	...		4.8	6.4	...	...	...	...	6.4	6.7
1/4	19	25	23.8	25.4	±1.5/-0.0	35	25	27	30.2	±0.8/-0.0	4.8	6.4	9.5	0.8	17.5	±1.5/-0.0	8.1	10.2
3/8	22	32	27.0	31.8	±1.5/-0.0	48	32	27	30.2	±0.8/-0.0	4.8	6.4	9.5	0.8	20.7	±1.5/-0.0	9.1	10.4
1/2	28	38	33.4	38.1	±1.5/-0.0	48	32	33	33.4	±0.8/-0.0	6.4	7.9	9.5	0.8	23.8	±1.5/-0.0	10.9	13.6
3/4	35	44	38.1	44.5	±1.5/-0.0	51	37	38	34.9	±0.8/-0.0	6.4	7.9	9.5	0.8	27.0	±1.5/-0.0	12.7	13.9
1	44	57	46.1	57.2	±1.5/-0.0	60	41	43	42.9	±0.8/-0.0	9.7	11.2	9.5	0.8	33.4	±1.5/-0.0	14.7	17.3
1 1/4	57	64	55.6	63.5	±1.5/-0.0	67	44	46	47.6	±0.8/-0.0	9.7	11.2	9.5	0.8	42.9	±1.5/-0.0	17.0	18.4
1 1/2	64	76	63.5	76.2	±1.5/-0.0	79	44	48	50.8	±0.8/-0.0	11.2	12.7	9.5	0.8	49.2	±1.5/-0.0	17.8	18.4
2	76	92	79.4	79.4	±1.5/-0.0	86	48	51	57.2	±1.5/-0.0	12.7	15.7	9.5	0.8	61.9	±1.5/-0.0	19.0	19.2
2 1/2	92	108	92.1	92.1	±1.5/-0.0	92	60	64	63.5	±1.5/-0.0	15.7	19.0	9.5	0.8	73.0	±1.5/-0.0	23.6	28.9
3	108	127	111.1	111.1	±1.5/-0.0	108	65	68	69.9	±1.5/-0.0	19.0	22.4	9.5	0.8	114.3	±1.5/-0.0	25.9	30.5
4	140	159	141.3	141.3	±1.5/-0.0	121	68	75	76.2	±1.5/-0.0	22.4	28.4	9.5	0.8	114.3	±1.5/-0.0	27.7	33.0

GENERAL NOTE : Dimensions are in millimeters.

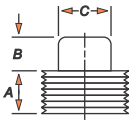

SQUARE HEAD PLUG

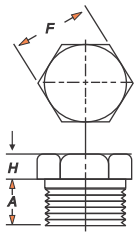

HEX HEAD PLUG

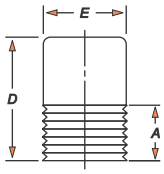

ROUND HEAD PLUG

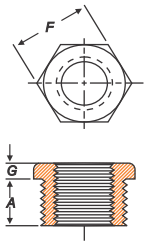

HEX HEAD BUSHING

FLUSH BUSHING

DIMENSIONS OF PLUGS & BUSHINGS [ANSI B 16.11]

Nominal Pipe Size (mm)	Nominal Pipe Size (Inch)	A Min. Length A	B Square Head Plugs: Min. Square Height B	C Square Head Plugs: Min. Width Flats, C	E Round Head Plugs: Nominal Head Diameter E	D Round Head Plugs: Min. Length D	F Hex Plugs and Bushings: Nominal Width Flats F	G Hex Plugs and Bushings: Min. Hex Height Bushing G	H Hex Plugs and Bushings: Min. Hex Height Plug H
6	1/8	10	6	7.15	10	35	11.11	...	6
8	1/4	11	6	9.55	14	41	15.9	3	6
10	3/8	13	8	11.11	18	41	17.46	4	8
15	1/2	14	10	14.29	21	44	23	5	8
20	3/4	16	11	15.88	27	44	27	6	10
25	1	19	13	20.64	33	51	34.93	6	10
32	1-1/4	21	14	23.81	43	51	44.45	7	14
40	1-1/2	21	16	28.58	48	51	50.80	8	16
50	2	22	18	33.27	60	64	63.5	9	18
65	2-1/2	27	19	38.1	73	70	76.2	10	19
80	3	28	21	42.86	89	70	88.9	10	21
100	4	32	25	63.5	114	76	117.5	13	25

BULL PLUGS

(As Per MSS SP 95)

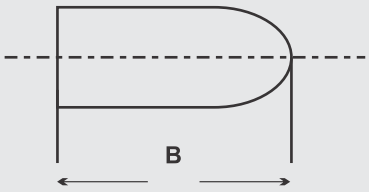

DIMENSIONS OF BULL PLUGS MSS SP 95

Size (Inch)	Outside Diameter (mm)	B End To End(mm)
1/8	10.3	51
1/4	13.7	51
3/8	17.1	57
1/2	21.3	64
3/4	26.7	70
1	33.4	76
1-1/4	42.2	83
1-1/2	48.3	89
2	60.3	102
2-1/2	73	127
3	88.9	152
3-1/2	101.6	165
4	114.3	178
5	141.3	216
6	168.3	254
8	219.1	279
10	273	330
12	328.8	356

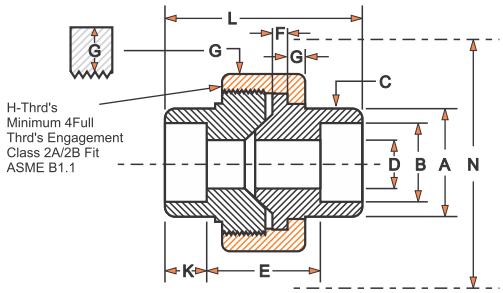

Pipe Unions - Socket Welding Ends Class 3000 (As per MSS SP 83 - 2018)

Nominal Pipe Size	A Pipe End Min.	B Socket Bore Dia.		C Socket Wall Min.	D Water Way Bore (a)		E Laying Length		F Male Flange Min.	G Nut Min.	H Thrds Per Inch	J Bearing	K Depth of Socket Min.	L Length Assem. Nominal	N Clear Assem. Nut
	Min.	Min.	Max.		Min.	Max.	Min.	Max.							
⅛	21.84	10.67	11.18	3.18	6.07	7.59	19.05	22.35	3.18	3.18	16.00	1.24	9.65	41.40	50.80
¼	21.84	14.10	14.61	3.30	8.48	10.01	19.05	22.35	3.18	3.18	16.00	1.24	9.65	41.40	50.80
⅜	25.91	17.53	18.03	3.51	11.76	13.28	20.57	26.92	3.43	3.43	14.00	1.37	9.65	45.97	55.88
½	31.24	21.72	22.23	4.09	15.04	16.56	20.57	26.92	3.68	3.68	14.00	1.50	9.65	49.02	58.42
¾	37.08	27.05	27.56	4.27	20.17	21.69	25.40	31.75	4.06	4.06	11.00	1.68	12.70	56.90	66.04
1	45.47	33.78	34.29	4.98	25.88	27.41	26.16	34.29	4.57	4.45	11.00	1.85	12.70	61.98	78.74
1 ¼	54.86	42.55	43.05	5.28	34.29	35.81	32.51	40.64	5.33	5.21	10.00	2.13	12.70	71.12	93.98
1 ½	61.47	48.64	49.15	5.54	40.13	41.66	34.29	42.16	5.84	5.59	10.00	2.31	12.70	76.45	111.76
2	75.18	61.11	61.62	6.05	51.74	2.46	37.34	45.47	6.60	6.35	10.00	2.69	15.75	86.11	132.08
2 ½	91.69	73.81	74.45	7.67	61.19	64.24	52.07	61.72	7.49	7.11	8.00	3.07	15.75	102.36	149.86
3	109.22	89.79	90.42	8.31	76.40	79.45	53.59	63.75	8.26	8.00	8.00	3.53	15.75	108.97	175.26

Note : (a) The Contact diameter of the male/female tailpiece is affected by the waterway bore (Col. D).
The manufacturer shall consider the relationship between the contact point and Waterway diameter in his design.

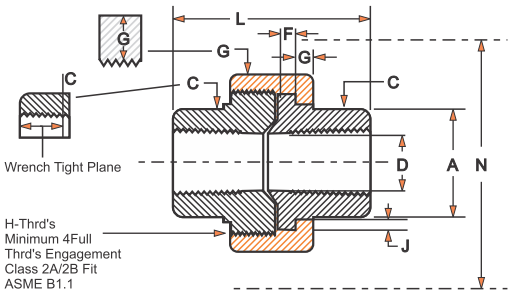

Pipe Unions - Threaded Ends Class 3000 (As per MSS SP 83 - 2018)

Nominal Pipe Size	A Pipe End Min.	C Wall Min.	D Water Way Bore (a)		F Male Flange Min.	G Nut Min.	H Thrds Per Inch	J Bearing	L Length Assem. Nominal	N Clear Assem. Nut
			Min.	Max.						
⅛	14.73	2.41	6.43	8.43	3.18	3.18	16.00	1.24	41.40	50.80
¼	19.05	3.02	9.45	11.13	3.18	3.18	16.00	1.24	41.40	50.80
⅜	22.86	3.20	13.51	14.27	3.43	3.43	14.00	1.37	45.97	55.88
½	27.69	3.73	17.07	17.86	3.68	3.68	14.00	1.50	49.02	58.42
¾	33.53	3.91	21.39	23.01	4.06	4.06	11.00	1.68	56.90	66.04
1	41.40	20.07	27.74	28.98	4.57	4.45	11.00	1.85	61.98	78.74
1 ¼	50.55	4.85	35.36	37.69	5.33	5.21	10.00	2.13	71.12	93.98
1 ½	57.15	5.08	41.20	43.54	5.84	5.59	10.00	2.31	76.45	111.76
2	70.10	5.54	52.12	55.58	6.60	6.35	10.00	2.69	86.11	132.08
2 ½	85.34	7.01	64.31	66.27	7.49	7.11	8.00	3.07	102.36	149.86
3	102.36	7.62	77.27	82.55	8.26	8.00	8.00	3.53	108.97	175.26

Note : (a) The Contact diameter of the male/female tailpiece is affected by the waterway bore (Col. D).
The manufacturer shall consider the relationship between the contact point and Waterway diameter in his design.

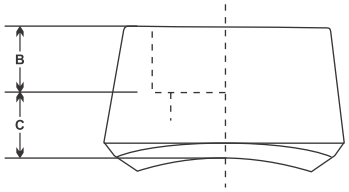

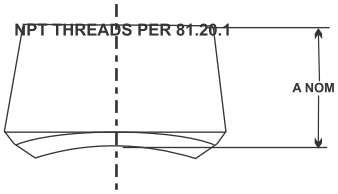

Dimension of Branch Outlet Socket Welding as per MSS SP 97

OUTLET DN	OUTLET NPS	B MIN	C MAX 3000	C MAX 6000
6	1/8	6	19	
8	1/4	8	19	
10	3/8	10	21	
15	1/2	15	25	
2	3/4	2	27	32
25	1	25	33	37
32	1.1/4	32	33	40
40	1.1/2	40	35	41
50	2	50	38	43
65	2.1/2	65	46	52
80	3	80	51	
100	4	100	57	

Tolerance : 1/8 - 3/4 ± 0.8MM 1 - 4 ± 1.6mm
Dimensions are in millimeters.

Dimension of Branch Outlet Threaded as per MSS SP 97

OUTLET DN	OUTLET NPS	A FACE OF FITTNGS TO CROTCH THREADED 3000	A FACE OF FITTNGS TO CROTCH THREADED 6000
6	1/8	19	
8	1/4	19	
10	3/8	21	
15	1/2	25	
2	3/4	27	32
25	1	33	37
32	1.1/4	33	40
40	1.1/2	35	41
50	2	38	43
65	2.1/2	46	52
80	3	51	
100	4	57	

Tolerance : 1/8 - 3/4 ± 0.8MM 1 - 4 ± 1.6mm
Dimensions are in millimeters.

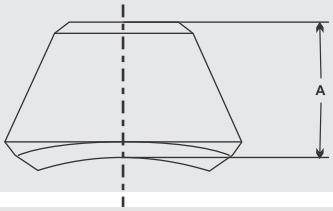

Dimensions are in millimeters.
Tolerance : 1/8-3/4 ± 0.8mm
1 - 4 ± 1.6mm
5 - 12 ± 3.2mm
14 - 24 ± 4.8mm

Dimension of Branch Outlet - Butt Welding as per MSS SP 97

Outlet DN	Outlet NPS	A FACE OF FITTNGS TO CROTCH Standard Reducing	Standard Full	Extra Strong Reducing	Extra Strong Full	Schedule 160 Reducing	Schedule 160 Full
6	1/2	16		16			
8	1/4	16		16			
10	3/8	19		19			
15	1/2	19	19	19	19	28	28
20	/4	22	22	22	22	32	32
25	1	27	27	27	27	38	38
32	1.1/4	32	32	32	30	44	44
40	1.1/2	33	33	33	33	51	51
50		38	38	38	38	55	55
65	2.1/2	41	41	41	41	62	62
80	3	44	44	44	44	73	73
90	3.1/2	48	51	48	51	-	-
100	4	51	51	51	51	84	84

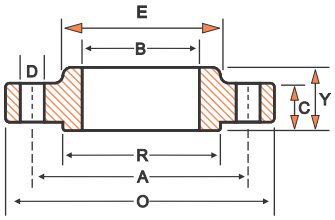

SLIP-ON WELDING

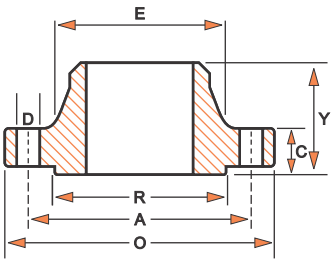

WELDING NECK

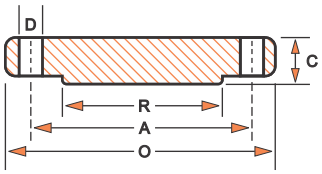

BLIND

DIMENSIONS OF CLASS 150 FLANGES (ANSI B 16.5)

Nominal Pipe Size (inch)	(mm)	O Flange Dia O	A Dia of Bolt Circle A	D Dia of Bolt Holes D	No. of Holes	C Thk of Flange C	E Dia of Hub E	Y Length through Hub S/o. & S/w Y	Y W/N Y	Y L/J Y	B Dia of Bore S/O & S/W B	B L/J B	R Dia of R/F R	F Depth of Socket F
1/2	15	90	60.3	15.9	4	11.2	30	14	46	16	22.2	22.9	34.9	10
3/4	20	100	69.9	15.9	4	12.8	38	14	51	16	27.7	28.2	42.9	11
1	25	110	79.4	15.9	4	14.3	49	16	54	17	34.5	34.9	50.8	13
1.1/4	32	115	88.9	15.9	4	15.9	59	19	56	21	43.2	43.7	63.5	14
1.1/2	40	125	98.4	15.9	4	17.5	65	21	60	22	49.5	50.0	73.0	16
2	50	150	120.7	19.0	4	19.1	78	24	62	25	61.9	62.5	92.1	17
2.1/2	65	180	139.7	19.0	4	22.3	90	27	68	29	74.6	75.4	104.8	19
3	80	190	152.4	19.0	4	23.9	108	29	68	30	90.7	91.4	127.0	21
4	100	230	190.5	19.0	8	23.9	135	32	75	33	116.1	116.8	157.2	-
5	125	255	215.9	22.2	8	23.9	164	35	87	36	143.8	114.4	185.7	-
6	150	280	241.3	22.2	8	25.5	192	38	87	40	170.7	171.4	215.9	-
8	200	345	298.5	22.2	8	28.6	246	43	100	44	221.5	222.2	269.9	-
10	250	405	362.0	25.4	12	30.2	305	48	100	49	276.2	277.4	323.8	-
12	300	485	431.8	25.4	12	31.8	365	54	113	56	327.0	328.2	381.0	-
14	350	535	476.3	28.6	12	35.0	400	56	125	79	359.2	360.2	412.8	-
16	400	595	539.8	28.6	16	36.6	457	62	125	87	410.5	411.2	469.9	-
18	450	635	577.9	31.7	16	39.7	505	67	138	97	461.8	462.3	533.4	-
20	500	700	635.0	31.7	20	42.9	559	71	143	103	513.1	514.3	584.2	-
24	600	815	749.3	34.9	20	47.7	663	81	151	111	616.0	616.0	692.2	-

DIMENSIONS OF CLASS 300 FLANGES (ANSI B 16.5)

Nominal Pipe Size (inch)	(mm)	O Flange Dia O	A Dia of Bolt Circle A	D Dia of Bolt Holes D	No. of Holes	C Thk of Flange C	E Dia of Hub E	Y Length through Hub S/o. & S/w Y	Y W/N Y	Y L/J Y	B Dia of Bore S/O & S/W B	B L/J B	R Dia of R/F R	F Depth of Socket F
1/2	15	95	66.7	15.9	4	14.3	38	21	51	22	22.2	22.9	34.9	10
3/4	20	115	82.6	19.0	4	15.9	48	24	56	25	27.7	28.2	42.9	11
1	25	125	88.9	19.0	4	17.5	54	25	60	27	34.5	34.9	50.8	13
1.1/4	32	135	98.4	19.0	4	19.1	64	25	64	27	43.2	43.7	63.5	14
1.1/2	40	155	114.3	22.2	4	20.7	70	29	67	30	49.5	50.0	73.0	16
2	50	165	127.0	19.0	8	22.3	84	32	68	33	61.9	62.5	92.1	17
2.1/2	65	190	149.2	22.2	8	25.4	100	37	75	38	74.6	75.4	104.8	19
3	80	210	168.3	22.2	8	28.6	117	41	78	43	90.7	91.4	127.0	21
4	100	255	200.0	22.2	8	31.8	146	46	84	48	116.1	116.8	157.2	-
5	125	298	235.0	22.2	8	35.0	178	49	97	51	143.8	114.4	185.7	-
6	150	320	269.9	22.2	12	36.6	206	51	97	52	170.7	171.4	215.9	-
8	200	380	330.2	25.4	12	41.3	260	60	110	62	221.5	222.2	269.9	-
10	250	445	387.4	28.6	16	47.7	321	65	116	95	276.2	277.4	323.8	-
12	300	520	450.8	31.7	16	50.8	375	71	129	102	327.0	328.2	381.0	-
14	350	585	514.4	31.7	20	54.0	425	75	141	111	359.2	360.2	412.8	-
16	400	650	571.5	34.9	20	57.2	483	81	144	121	410.5	411.2	469.9	-
18	450	710	628.6	34.9	24	60.4	533	87	157	130	461.8	462.3	533.4	-
20	500	775	685.8	34.9	24	63.5	587	94	160	140	513.1	514.3	584.2	-
24	600	915	812.8	41.3	24	69.9	702	105	167	152	616.0	616.0	692.2	-

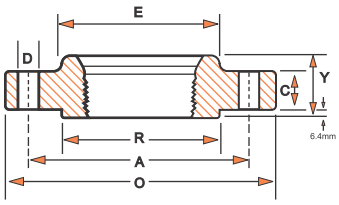

THREADED

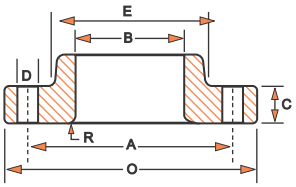

LAPPED

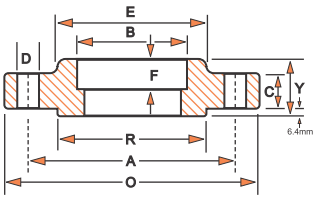

SOCKET WELDING
(1/2 TO 3 ONLY)

DIMENSIONS OF CLASS 600 FLANGES (ANSI B 16.5)

Nominal Pipe Size (inch)	(mm)	O Flange Dia	A Dia of Bolt Circle	D Dia of Bolt Holes	No. of Holes	C Thk of Flange	E Dia of Hub	Y Length through Hub S/o. & S/w	Y W/N	Y L/J	B Dia of Bore S/O & S/W	B L/J	R Dia of R/F	F Depth of Socket
1/2	15	95	66.7	15.9	4	14.3	38	22	52	22	22.2	22.9	34.9	10
3/4	20	115	82.6	19.0	4	15.9	48	25	57	25	27.7	28.2	42.9	11
1	25	125	88.9	19.0	4	17.5	54	27	62	27	34.5	34.9	50.8	13
1.1/4	32	135	98.4	19.0	4	20.7	64	29	67	29	43.2	43.7	63.5	14
1.1/2	40	155	114.3	22.2	4	22.3	70	32	70	32	49.5	50.0	73.0	16
2	50	165	127.0	19.0	8	25.4	84	37	73	37	61.9	62.5	92.1	17
2.1/2	65	190	149.2	22.2	8	28.6	100	41	79	41	74.6	75.4	104.8	19
3	80	210	168.3	22.2	8	31.8	117	46	83	46	90.7	91.4	127.0	-
4	100	275	215.9	25.4	8	38.1	152	54	102	54	116.1	116.8	157.2	-
5	125	330	266.7	28.6	8	44.5	189	60	114	60	143.8	114.4	185.7	-
6	150	355	292.1	28.6	12	47.7	222	67	117	67	170.7	171.4	215.9	-
8	200	420	349.2	31.7	12	55.6	273	76	133	76	221.5	222.2	269.9	-
10	250	510	431.8	34.9	16	63.5	343	86	152	111	276.2	277.4	323.8	-
12	300	560	489.0	34.9	20	66.7	400	92	156	117	327.0	328.2	381.0	-
14	350	605	527.0	38.1	20	69.9	432	94	165	127	359.2	360.2	412.8	-
16	400	685	603.2	41.3	20	76.2	495	106	178	140	410.5	411.2	469.9	-
18	450	745	654.0	44.4	20	82.6	546	117	184	152	461.8	462.3	533.4	-
20	500	815	723.9	44.4	24	88.9	610	127	190	165	513.1	514.3	584.2	-
24	600	940	838.2	50.8	24	101.6	718	140	203	184	616.0	616.0	692.2	-

DIMENSIONS OF CLASS 900 FLANGES (ANSI B 16.5)

Nominal Pipe Size (inch)	(mm)	O Flange Dia	A Dia of Bolt Circle	D Dia of Bolt Holes	No. of Holes	C Thk of Flange	E Dia of Hub	Y Length through Hub S/O. & S/W	Y W/N	Y L/J	B Dia of Bore S/O & S/W	B L/J	R Dia of R/F	F Depth of Socket
1/2	15	120	82.6	22.2	4	22.3	38	32	60	32	22.2	22.9	34.9	10
3/4	20	130	88.9	22.2	4	25.4	44	35	70	35	27.7	28.2	42.9	11
1	25	150	101.6	25.4	4	28.6	52	41	73	41	34.5	34.9	50.8	13
1.1/4	32	160	111.1	25.4	4	28.6	64	41	73	41	43.2	43.7	63.5	14
1.1/2	40	180	123.8	28.6	4	31.8	70	44	83	44	49.5	50.0	73.0	16
2	50	215	165.1	25.4	8	38.1	105	57	102	57	61.9	62.5	92.1	17
2.1/2	65	245	190.5	28.6	8	41.3	124	64	105	64	74.6	75.4	104.8	19
3	80	240	190.5	25.4	8	38.1	127	54	102	54	90.7	91.4	127.0	-
4	100	290	235.0	31.7	8	44.5	159	70	114	70	116.1	116.8	157.2	-
5	125	350	279.4	35.0	8	50.8	190	79	127	79	143.8	114.4	185.7	-
6	150	380	317.5	31.7	12	55.6	235	86	140	86	170.7	171.4	215.9	-
8	200	470	393.7	38.1	12	63.5	298	102	162	114	221.5	222.2	269.9	-
10	250	545	469.9	38.1	16	69.5	368	108	184	127	276.2	277.4	323.8	-
12	300	610	533.4	38.1	20	79.4	419	117	200	143	327.0	328.2	381.0	-

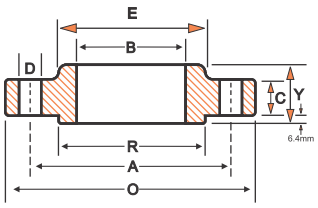

SLIP-ON WELDING

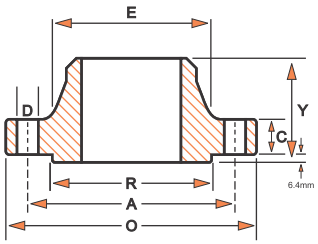

WELDING NECK

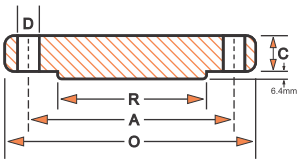

BLIND

DIMENSIONS OF CLASS 1500 FLANGES (ANSI B 16.5)

Nominal Pipe Size (inch)	(mm)	O Flange Dia O	A Dia of Bolt Circle A	D Dia of Bolt Holes D	No. of Holes	C Thk of Flange C	E Dia of Hub E	Y Length through Hub S/o. & S/w Y	Y Length through Hub W/N Y	Y Length through Hub L/J Y	B Dia of Bore S/O & S/W B	B Dia of Bore L/J B	R Dia of R/F R	F Depth of Socket F
1/2	15	120	82.6	22.2	4	22.3	38	32	60	32	22.2	22.9	34.9	10
3/4	20	130	88.9	22.2	4	25.4	44	35	70	35	27.7	28.2	42.9	11
1	25	150	101.6	25.4	4	28.6	52	41	73	41	34.5	34.9	50.8	13
1.1/4	32	160	111.1	25.4	4	28.6	64	41	73	41	43.2	43.7	63.5	14
1.1/2	40	180	123.8	28.6	4	31.8	70	44	83	44	49.5	50.0	73.0	16
2	50	215	165.1	25.4	8	38.1	105	57	102	57	61.9	62.5	92.1	17
2.1/2	65	245	190.5	28.6	8	41.3	124	64	105	64	74.6	75.4	104.8	19
3	80	265	203.2	31.7	8	47.7	133	73	117	73	90.7	91.4	127.0	-
4	100	310	241.3	34.9	8	54.0	162	91	124	90	116.1	116.8	157.2	-
5	125	375	292.1	41.3	8	73.1	197	105	156	105	143.8	144.4	185.7	-
6	150	395	317.5	38.1	12	82.6	229	119	171	119	170.7	171.4	215.9	-
8	200	485	393.7	44.4	12	92.1	292	143	213	143	221.5	222.2	269.9	-
10	250	585	482.6	50.8	12	105.0	368	159	254	178	276.3	277.4	323.8	-
12	300	675	571.5	54.0	16	123.9	451	181	283	219	327.1	328.2	381.0	-

DIMENSIONS OF CLASS 2500 FLANGES (ANSI B 16.5)

Nominal Pipe Size (inch)	(mm)	O Flange Dia O	A Dia of Bolt Circle A	D Dia of Bolt Holes D	No. of Holes	C Thk of Flange C	E Dia of Hub E	Y Length through Hub S/o. & S/w Y	Y Length through Hub W/N Y	Y Length through Hub L/J Y	B Dia of Bore S/O & S/W B	B Dia of Bore L/J B	R Dia of R/F R	F Depth of Socket F
1/2	15	135	88.9	22.2	4	30.2	43	40	73	40	22.3	22.9	34.9	10
3/4	20	140	95.2	22.2	4	31.8	51	43	79	43	28.2	28.2	42.9	11
1	25	160	108.0	25.4	4	35.0	57	48	89	48	34.9	34.9	50.8	13
1.1/4	32	185	130.2	28.6	4	38.1	73	52	95	52	43.7	43.7	63.5	14
1.1/2	40	205	146.0	31.7	4	44.5	79	60	111	60	50.0	50.0	73.0	16
2	50	235	171.4	28.6	8	50.9	95	70	127	70	62.5	62.5	92.1	17
2.1/2	65	265	196.8	31.7	8	57.2	114	79	143	79	75.4	75.4	104.8	19
3	80	305	228.6	34.9	8	66.7	133	92	168	92	91.4	91.4	127.0	-
4	100	355	273.0	41.3	8	76.2	165	108	190	108	116.8	116.8	157.2	-
5	125	420	323.8	47.6	8	92.1	203	130	229	130	144.4	144.4	185.7	-
6	150	485	368.3	54.0	8	108.0	235	152	273	152	171.4	171.4	215.9	-
8	200	550	438.2	54.0	12	127.0	305	178	318	178	222.2	222.2	269.9	-
10	250	675	539.8	66.7	12	165.1	375	229	419	229	277.4	277.4	323.8	-
12	300	760	619.1	73.0	12	184.2	441	254	464	254	328.2	328.2	381.0	-

GLOBAL CUSTOMERS

BHT®

BHT FORGE

Note

/bhtforge
/bht_forge_

BHT®

BHT FORGE

www.bhtforge.com

info@bhtforge.com

+91 94267 85447

Survey No. 876, 1 & 876/2, Kalavad Road, Opp. Subha - 9,
Bhagvati Industrial Area, Anandpar - 361162, Rajkot, (Gujarat) India

A TrooPixel Design
+91 7778814770